INSTRUCTIONS FOR USE

P78269	NRS Community Bed	P78283	NRS Community Bed Low
P78271	NRS Community Bed Plus	P78295	NRS Community Bed Plus Low

Bed shown fitted with the 3-Bar Side Rails.

NRS Community Bed & Community Bed Plus

General Safety Warning

Please make sure that you read and follow these instructions carefully. Keep these instructions in a safe place for future reference.

Maximum User Weight

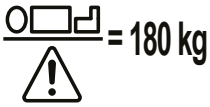

Maximum Safe Working Load

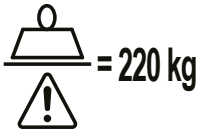

© NRS Healthcare

All rights reserved. Republication, duplication or modification in whole or in part is prohibited without prior written permission from NRS Healthcare. Trademarks are identified by ™ and ®. All trademarks are owned by or licensed to NRS Healthcare or its subsidiaries unless otherwise noted.

UI CONTENTS

1 INTRODUCTION 5
1.1 Groups of People Mentioned in this Manual 5
2 SAFETY 5
2.1 Safety Warning Symbols 5
2.2 Safety Instructions 5
3 INTENDED USE 6
4 PRODUCT OVERVIEW 7
4.1 Label Locations 8
5 UNPACKING 9
6 ASSEMBLY FOR TRANSPORT 9
7 ASSEMBLY OF BED FRAME FOR USE 12
7.1 Connect the Head End Mattress Platform to the Head End Panel. 12
7.2 Connect the Foot End Mattress Platform to the Foot End Panel. 12
7.3 Assemble the Mattress Platforms 13
7.4 Connect the Control Box Cables to the Actuators. 14
7.5 Fit the Mattress Retainers 14
7.6 Extending the Bed 14
7.7 Fitting the Mattress Platform Extension Plate (S39212) 15
7.8 Shortening the Bed 16
8 FITTING AND REMOVING THE OPTIONAL SIDE RAILS 16
8.1 Steel 2-Bar Side Rails (S39200) 16
8.2 Steel 3-Bar Side Rails (P80423) 16
8.3 Aluminium 3-Bar Side Rail (P80563) 17
8.4 Steel 3/4 Folding Side Rails (P80435) 18
9 FITTING THE MATTRESS 19
9.1 Mattress Selection 19
9.2 Fit the Mattress to the Bed 19
9.3 Fit the Mattress to an Extended Bed 20
10 BED OPERATIONS 20
10.1 Special safety warnings 20
10.2 Pre Operation Checklist 20
10.3 Locking the Castors 20
10.4 Handsets 21
10.5 Adjusting the Calf Angle 22
10.6 Raise the Side Rails (2 and 3-Bar Steel and 3-Bar Aluminium) 23
10.7 Lower the Side Rails (2 and 3-Bar Steel and 3-Bar Aluminium) 23
10.8 Raise the 3/4 Folding Side Rails 23
10.9 Lower the 3/4 Folding Side Rails 23
11 ACCESSORIES 24
11.1 Use of accessories 24
11.2 Steel 2-Bar Side Rail (S39200) and Steel 3-Bar Side Rail (P80423) 24
11.3 Aluminium 3-Bar Bed Rail (P80563) 24
11.4 3 Bar Aluminium Extensions (P80575) 24
11.5 Side Rail Loading Channels (P82055) 24
11.6 Steel 3/4 Folding Side Rails (P80435) 24
11.7 Cot Bumper for full length Side Rail (P81219) 24
11.8 NRS Community Bed End Panel Bumpers (S33659) 24
11.9 NRS Community Bed Grab Handle (P94367) 24
11.10 Lifting Pole (P80599) 24

11.11 Battery Back Up (P80605) 25
11.12 9 Button Handset (P81221) 25
11.13 End Panel Covers (P81920) 25
11.14 Mattresses 25
12 CLEANING AND DISINFECTING 25
12.1 General information 25
12.2 Cleaning the Bed 25
12.3 Disinfecting the Bed 25
13 INSPECTION AND MAINTENANCE 26
13.1 Inspections by the Care Provider 26
13.2 Basic fault-finding by Care Provider: 26
13.3 Inspections and Maintenance by the Owner 27
14 SPARE PARTS 28
15 TECHNICAL DATA 28
15.1 Control Unit 28
15.2 Actuators 28
16 SPECIFICATIONS 29
16.1 Construction 29
16.2 Environmental Conditions 30
16.3 Standards 30
17 SYMBOLS USED 30
18 PRODUCT DISPOSAL 31
19 PRODUCT WARRANTY 31

1 INTRODUCTION

This document contains instructions for the installation, operation and maintenance of the NRS Healthcare Community Beds.

Refer to the end of these instructions for details of the standards and classification that apply to this bed.

If you have any questions regarding the bed, please contact NRS Healthcare (contact details are provided on back cover).

1.1 Groups of People Mentioned in this Manual

This manual refers to the following groups of people involved with the installation, inspection, use, testing, maintenance or repair of the bed:

1.1.1 Owner

The owner (for example: suppliers of medical products, dealers, health care authorities, etc.) can be any person or organisation who owns the bed or under whose name the bed is being used. The owner is responsible for providing the necessary training and information to the specialised personnel and care provider.

1.1.2 Specialised Personnel

Specialised personnel are trained persons responsible for the delivery, installation, inspection, use, testing, maintenance or repair of the bed in accordance with these instructions.

1.1.3 Care Provider

Care providers are trained persons responsible for the use and operation of the bed in accordance with these instructions and the user's medical care or treatment.

1.1.4 User

The user is the person requiring the bed for their medical care or treatment.

2 SAFETY

Read and observe these safety precautions before use.

A risk assessment must be performed before using this bed. This should include but should not be limited to:

- Suitability of the bed for the user.
- Selection of the correct mattress for the user.
- Compatibility of the mattress with the bed.
- The risk of the user slipping between the mattress and the side rails.
- The risk of the user falling out of the bed.
- The risk of trapping or pinching.
- Any limitation of the user's ability to operate the bed.

Before using the bed you must make sure that:

- The product is safe and operating correctly.
- All persons responsible for installing, operating or maintaining the bed have access to and have fully read the user manual.

NRS Healthcare shall not be liable for any damage or injury caused by failure to follow these user instructions.

2.1 Safety Warning Symbols

The following symbols appear in this manual:

Danger Electricity
Hazardous voltage can cause severe injury or death.

Warning
Can cause serious injury, damage to the product or environment.

Other Symbols

Notes
Notes to accompany the section.

These notes must be read in accordance with the section it refers to.

2.2 Safety Instructions

ELECTRICAL HAZARDS

Install the power cord in a location that protects it from damage or disconnection during the operation of the bed.

Do not use multi plug sockets.

Remove the electrical power plug from the socket before disassembly/transport and cleaning.

Regularly check that the power cords are securely fastened, free from kinks, cuts & nicks and other damage.

GENERAL WARNINGS

Do not exceed the maximum user weight or safe working load (refer to Section 3).

Nursing beds are classified as active Class 1 medical devices. The owner must obey current regulations regarding the installation, use and operation of medical devices to make sure this product is safe to use.

All specialised personnel and care providers must be trained by the owner to use and operate the bed safely in accordance with the user instructions and the user's medical care or treatment.

Make sure substitute personnel have been fully trained on how to use the bed correctly and safely.

Make sure the bed is free from obstructions before making adjustments.

Bed adjustment must only be made by trained personnel or under supervision of trained personnel.

Make sure the hand control is securely fastened with the hook when not in use.

Put the hand control cable in a location that protects it from damage during the operation of the bed.

To reduce the risk of injury to the user, always set the bed to the lowest position when leaving the user unattended.

Regularly check the bed for damage to make sure it is safe and operates correctly (refer to Section 13).

Make sure that any electrical accessories have been installed correctly, including all cables and flexible tubes etc.

Do not use third party accessories (excluding mattresses) as these can cause serious injury or damage to the bed.

If you suspect any damage or malfunction to the bed, disconnect the power immediately and remove the bed from service. Clearly mark the item as "DAMAGED" or "FAULTY" and report it to the owner.

Do a full inspection after one year of continuous use, or change of user (refer to Section 13).

3 INTENDED USE

The bed is intended to provide care for users within these environments:

- Application Environment 3: Nursing Home.
- Application Environment 4: Private Home.

This bed is for indoor use only.

This bed must not be used for any other purpose or environment than that which it is intended.

Maximum user weight is 180 kg (28 st).

Safe working load of the bed is 220 kg.

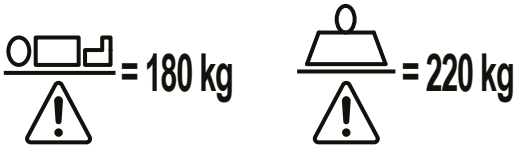

The safe working load is calculated as follows (in accordance with EN IEC 60601-2-52:2010):

Maximum user weight:	180 kg
Mattress:	20 kg
Accessories (including attached loads)	20 kg
Total	220 kg

If the combined weight of the mattress and accessories exceeds 40 kg, reduce the maximum user weight accordingly.

Recommended dimensions of the user:

- weight equal or above 40 kg (6.3 st)
- height between 146 cm and 190 cm (58" and 75")
- BMI equal or above 17.

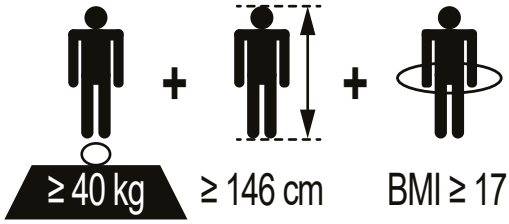

Following a risk assessment, the bed will support users taller than 190 cm by extending the bed (refer to Section 7.6).

This bed is not intended for children under 12 years of age.

This product has been designed to be reused.

Do not reuse the bed without:

- Cleaning and Disinfecting (refer to Section 12)
- Doing Maintenance (refer to Section 13).

4 PRODUCT OVERVIEW

The bed is supplied unassembled. It includes the following parts and assemblies:

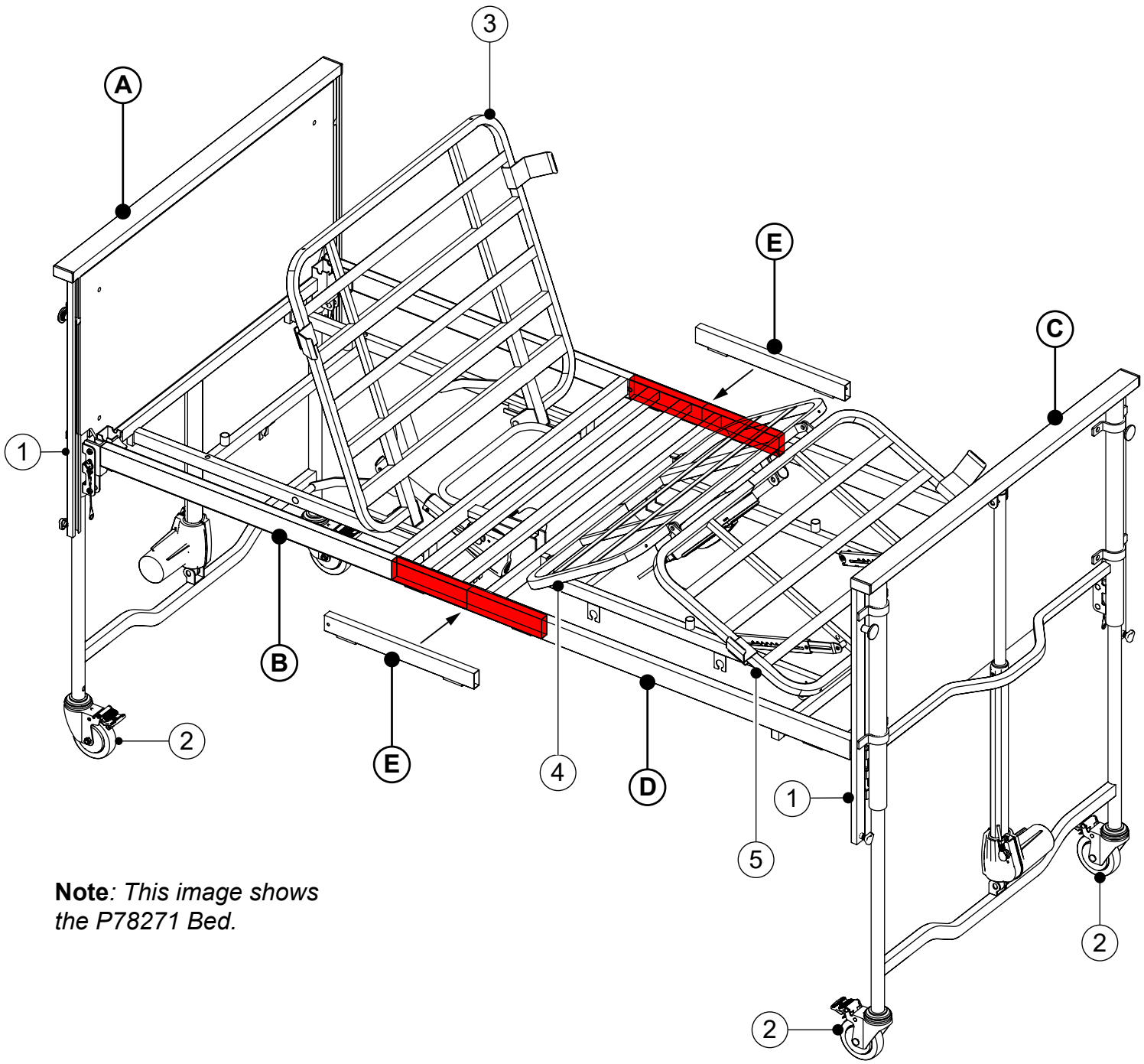

Note: *This image shows the P78271 Bed.*

Head End Panel (A)

The head end panel includes the head end frame, hi-lo actuator, side rail channels (1) and castors (2).

Head End Mattress Platform (B)

The head end mattress platform includes the mattress platform frame, back-rest (3) and back-rest actuator.

Foot End Panel (C)

The foot end panel includes the foot end frame, hi-lo actuator, side rail channels (1) and castors (2).

Foot End Mattress Platform (D)

The foot end mattress platform includes the mattress platform frame, platform extension rail, thigh-rest (4) and calf-rest (5), leg-rest actuator, control box, connection cables and hand control

Mattress Platform Connectors (E)

4.1 Label Locations

Foot Section

Foot End

WARNING
CHECK ALL Locking Screws
Have Been Fully Tightened
Before Using The Side Rails

Warning: Incompatible MATTRESSES can create HAZARDS. Read instructions for use.

SN A-9590200500001
NRS Healthcare, Sherwood House
Cartwright Way, Forest Business Park
Bardon Hill Coalville, Leics, LE67 1UB, UK
NRS Healthcare, 4C Altona Road
Blaris Industrial Estate, Lisburn,
Co Antrim, Northern Ireland, BT27 5QB
Tel. Customer Services 0345 121 8111
Email: customerservice@nrshealthcare.co.uk
www.nrshealthcare.com
P78269 - Community Bed
Class 1 Medical Device
U in: 100-240V ~ max 2.5A 50/60Hz IPX4
Int: 10%, max. 2 min. / 18min.
5 038948 782691

= 180KG = 220KG

WARNING
CHECK ALL Locking Screws
Have Been Fully Tightened
Before Using The Side Rails

Warning: Incompatible MATTRESSES can create HAZARDS. Read instructions for use.

= 180KG = 220KG

Warning: Incompatible SIDE RAILS can create HAZARDS. Read instructions for use.

WARNING
CHECK ALL Locking Screws
Have Been Fully Tightened
Before Using The Side Rails

Head End

Warning: Incompatible SIDE RAILS can create HAZARDS. Read instructions for use.

Head Section

WARNING
CHECK ALL Locking Screws
Have Been Fully Tightened
Before Using The Side Rails

Transport Brackets

This side to face outward with bed in transit mode

This side to face outward with bed in transit mode

Electrical System

The electrical operating system includes:

- Electronic control box with connection cables and mains power cable
- Hand control
- Head end hi-lo actuator
- Back-rest actuator
- Foot end hi-lo actuator
- Leg-rest actuator.

5 UNPACKING

Remove the packaging and check all parts carefully. Check all electrical cables and actuators for damage. Contact your supplier immediately if parts are missing or damaged and do not try to assemble.

The bed is supplied in two cartons as follows:

Carton 1 Contents:

- Head End Panel
- Foot End Panel

Carton 2 Contents:

- Head End Mattress Platform
- Foot End Mattress Platform
- Hand Controller
- Mattress Platform Connectors
- Transport Brackets (P78271 and P78295 only)
- Mattress retainer clips.

The back-rest actuator is stowed for shipping. Fix it to the frame before assembly for use.

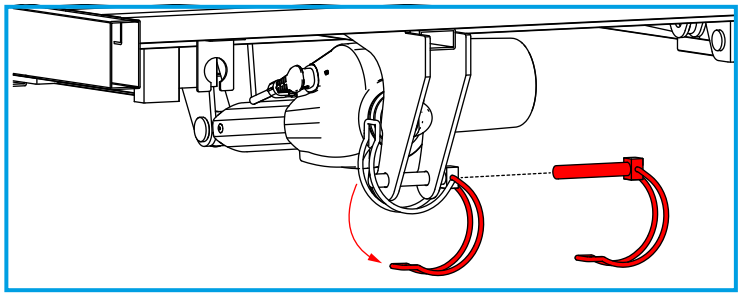

1. While supporting the actuator, remove the pin-clip.

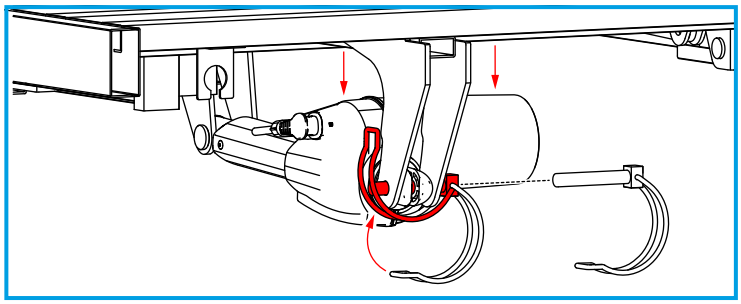

2. Lower the actuator into place, then line up the holes and replace the pin-clip.

6 ASSEMBLY FOR TRANSPORT

This section is for beds being supplied by a local authority community equipment store only. For bed assembly instructions please refer to Section 7.

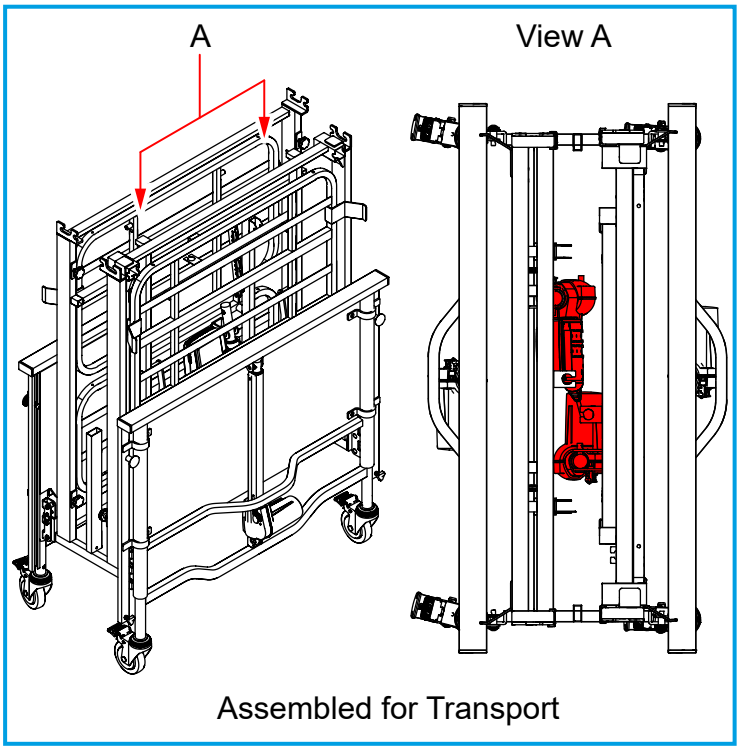

The owner or trained specialised personnel must assemble the bed onto the transport brackets before transportation to the user location.

The transport brackets are located under the bed at the head end.

The transport brackets (P82043) are optional on the P78269 and P78283 beds.

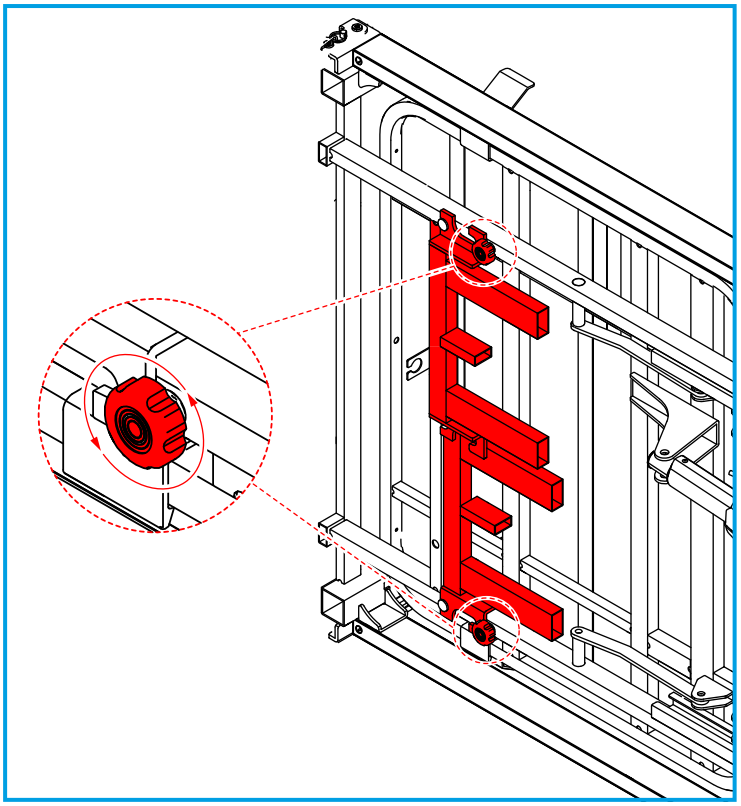

1. Unscrew the hand-wheels to release the transport brackets.
2. Lock the foot end panel castors (refer to Section 10.3).

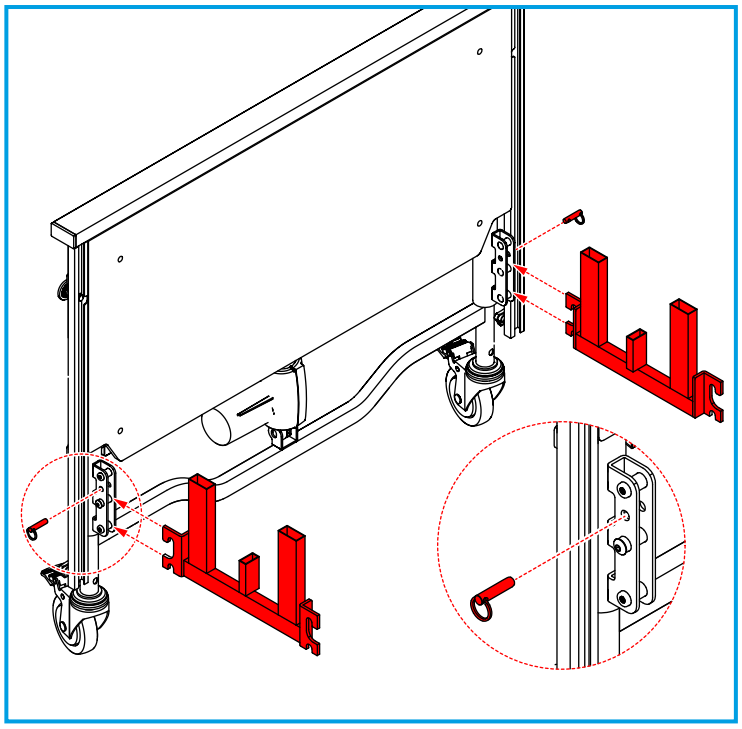

3. Hook the transport brackets onto the foot end panel brackets (lower pins) and secure with the retaining pins on both sides.

Fully insert the retaining pins and secure the assemblies.

We recommend resting the foot end panel against a wall before fitting the head end panel.

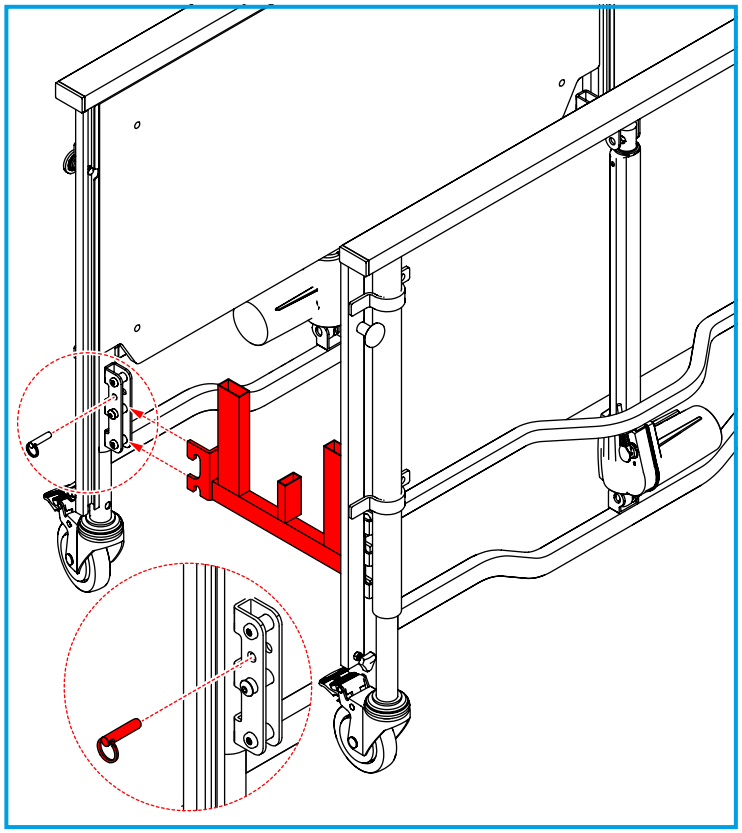

4. Hook the transport brackets onto the head end panel brackets (lower pins) and secure with the retaining pins on both sides.

Fully insert the retaining pins and secure the assemblies.

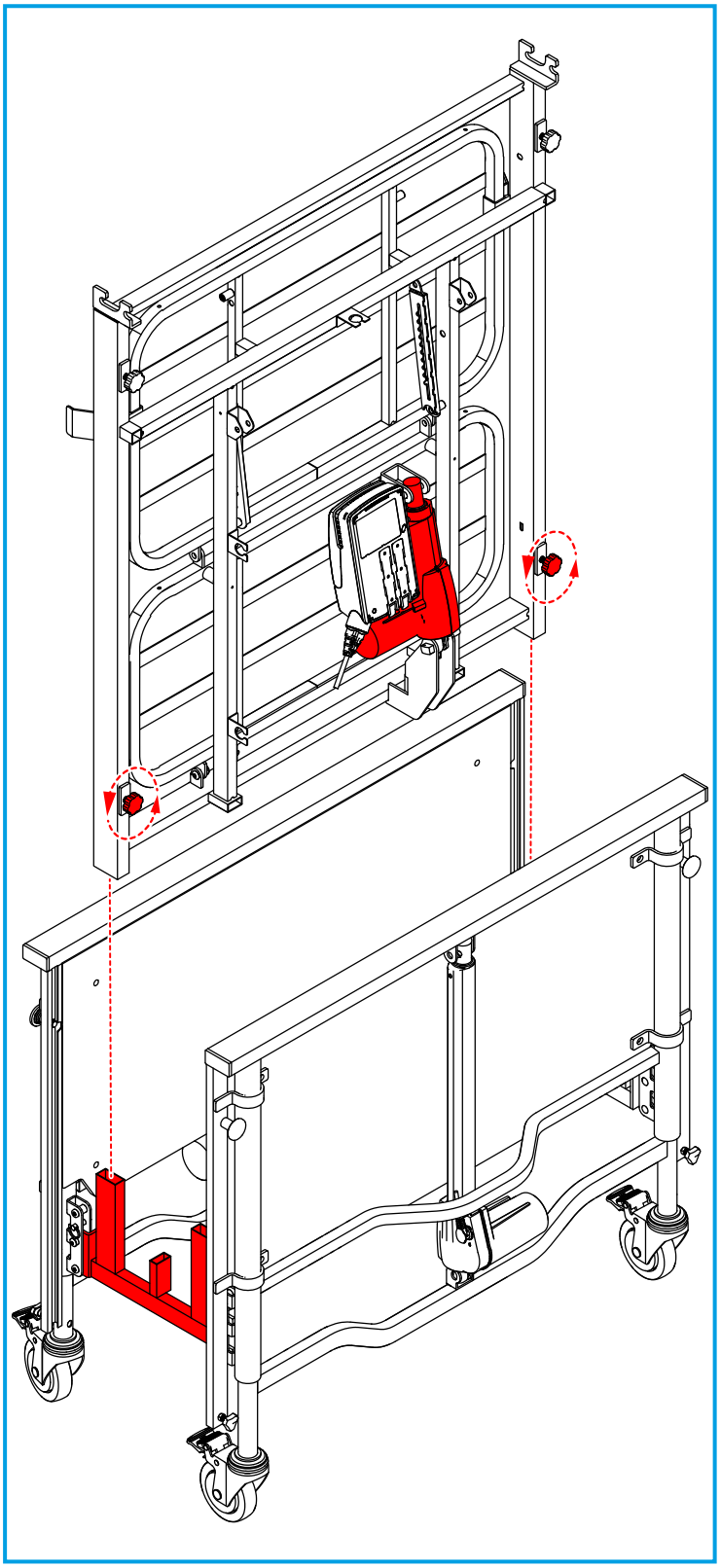

5. Loosen the foot end mattress platform hand-wheels on both sides.
6. Slot the foot end mattress platform on to the transport bracket on the same side as the foot end panel.

Make sure that the leg-rest actuator is facing the inside of the transport bracket.

7. Re-tighten the hand-wheels on both sides.
8. Wrap and secure the electrical cables around the foot end mattress platform.

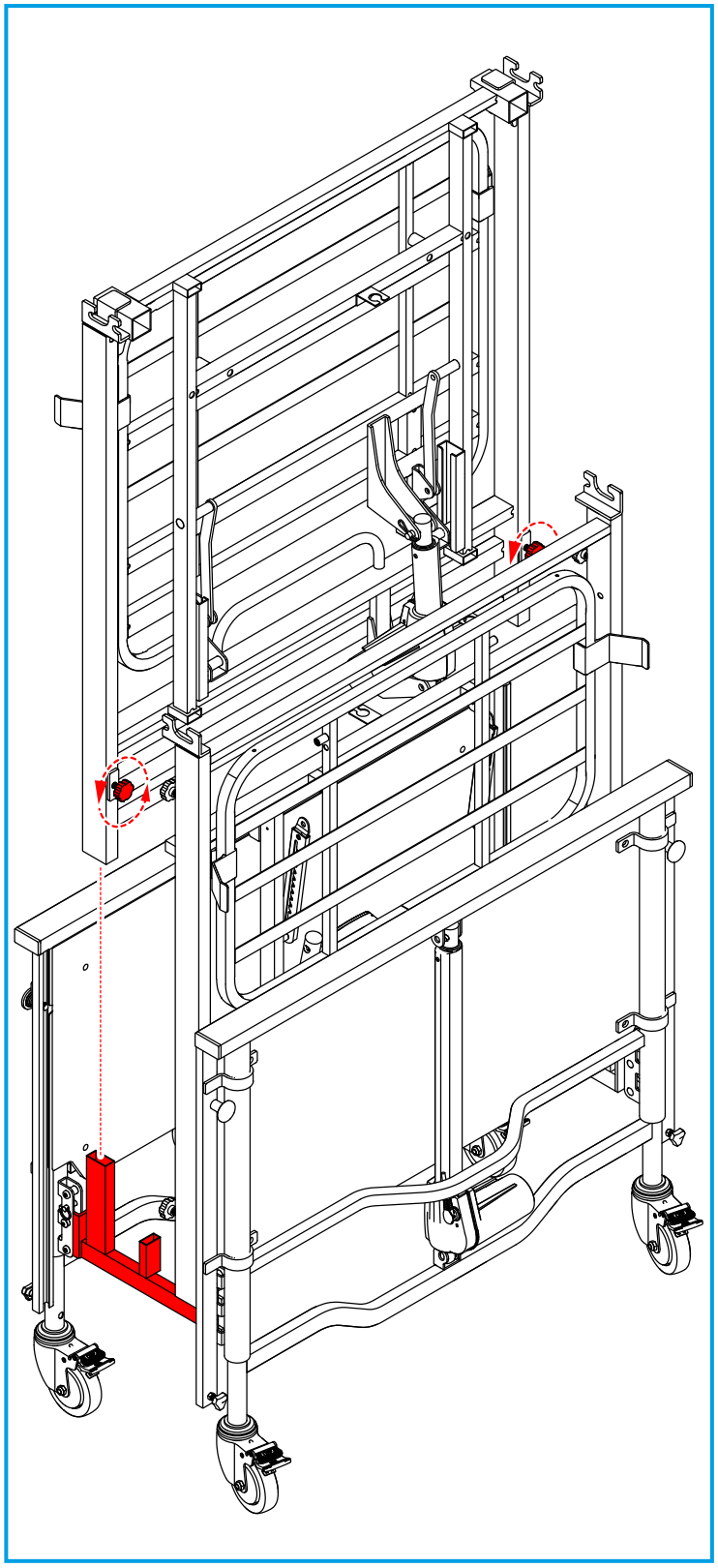

9. Loosen the head end mattress platform hand-wheels on both sides.
10. Slot the head end mattress platform assembly on to the transport bracket.

Make sure that the head end mattress platform actuator faces the inside of the transport bracket.

11. Re-tighten the hand-wheels on both sides.

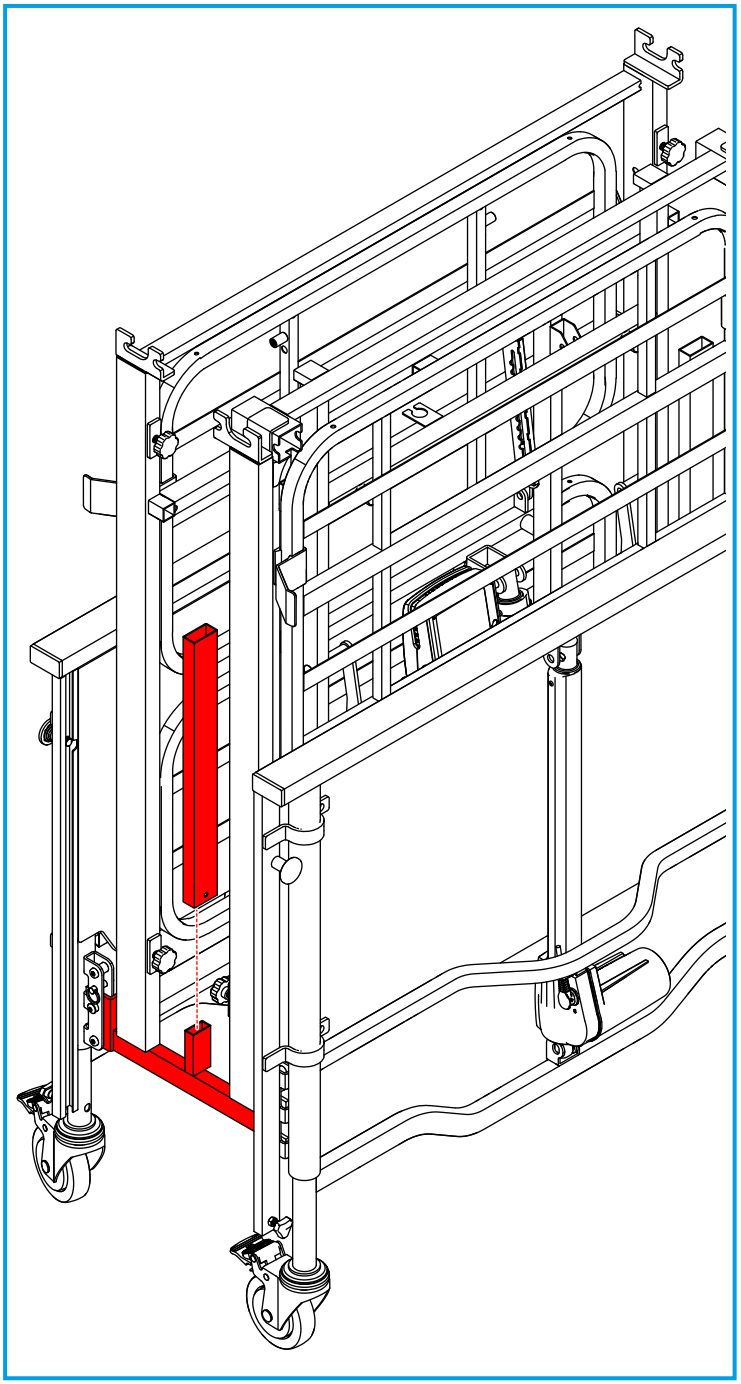

12. Slot the mattress platform connectors on to the transport bracket.

Make sure the transport assembly is fully secure before attempting to move.

13. Unlock the castors before moving the transport assembly (refer to Section 10.3).

7 ASSEMBLY OF BED FRAME FOR USE

Only trained specialised personnel may assemble the bed.

Each mattress platform must correspond with the correct end panel. Please check the item labels for confirmation. Incorrectly connected parts will cause the handset to malfunction.

Disassemble the bed from the transport brackets before assembly. To disassemble, reverse the steps in Section 6.

Make sure you have moved the back-rest actuator from the shipping position to the working position (refer to section 5).

7.1 Connect the Head End Mattress Platform to the Head End Panel.

When using the optional 2-Bar Side Rails (S39200), set the mattress platform to the lower 2 pins.

When using the optional 3-Bar Side Rails (P80423), set the mattress platform to the upper or lower pins.

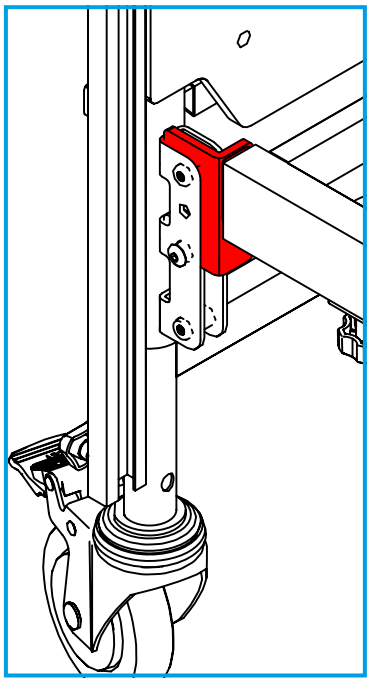

Upper 2 Pins

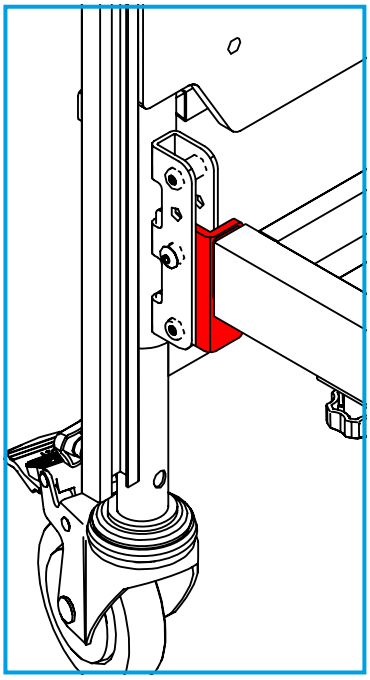

Lower 2 Pins

1. Check the item labels to make sure the mattress platform corresponds to the correct end panel.
2. Lock the head end panel castors (Refer to Section 10.3)

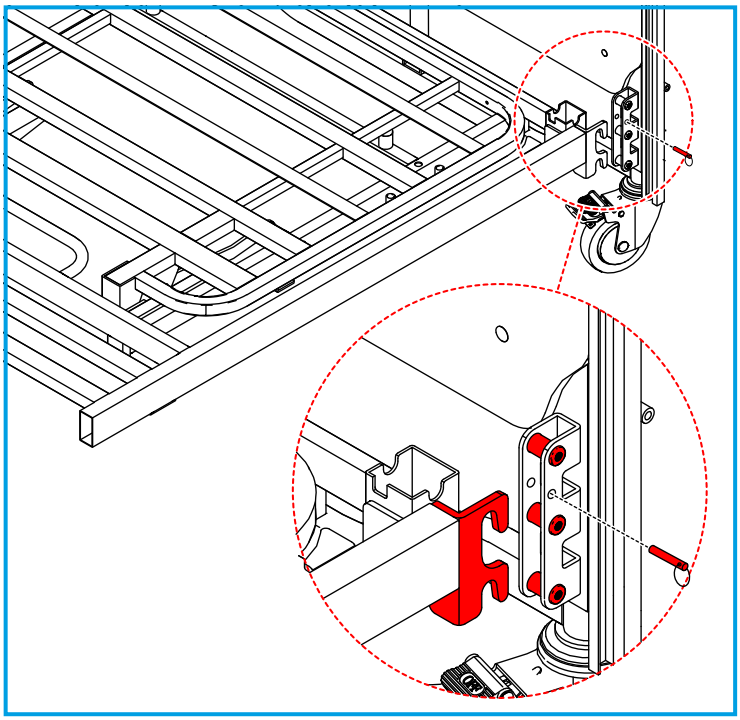

3. Remove the retaining pins from the head end panel mounting brackets on both sides.
4. Hook the head end mattress platform frame to the head end panel mounting brackets, then reinsert the retaining pins to secure.

Make sure the retaining pins are fully inserted and the assemblies secured.

7.2 Connect the Foot End Mattress Platform to the Foot End Panel.

Make sure that the foot end mattress platform is set at the same bracket height position as the head end mattress platform.

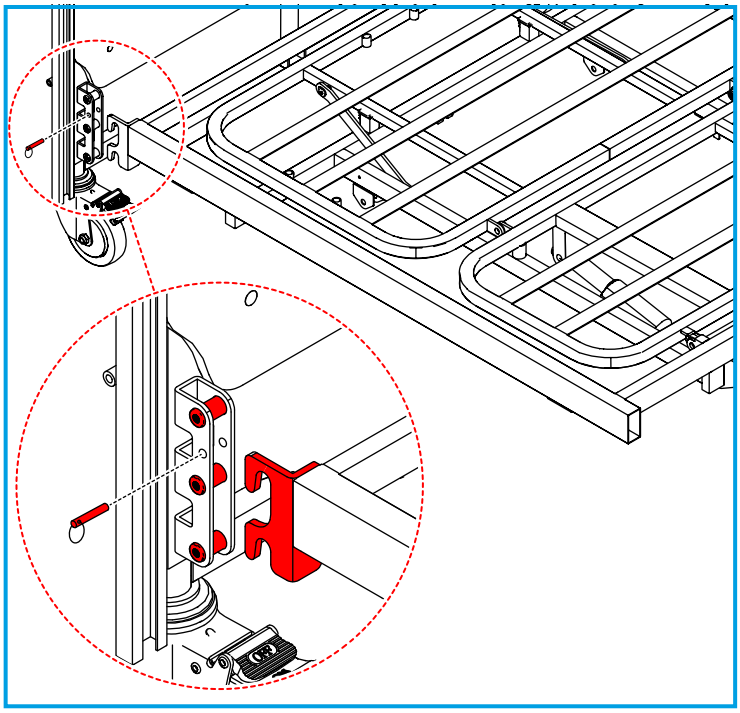

1. Check the item labels to make sure the mattress platform corresponds to the correct end panel.
2. Lock the foot end castors (refer to Section 10.3).
3. Remove the retaining pins from foot end panel mounting brackets on both sides.
4. Hook the foot end mattress platform frame to the head end panel mounting brackets, then reinsert the retaining pins to secure.

Make sure the retaining pins are fully inserted and the assemblies secured.

7.3 Assemble the Mattress Platforms

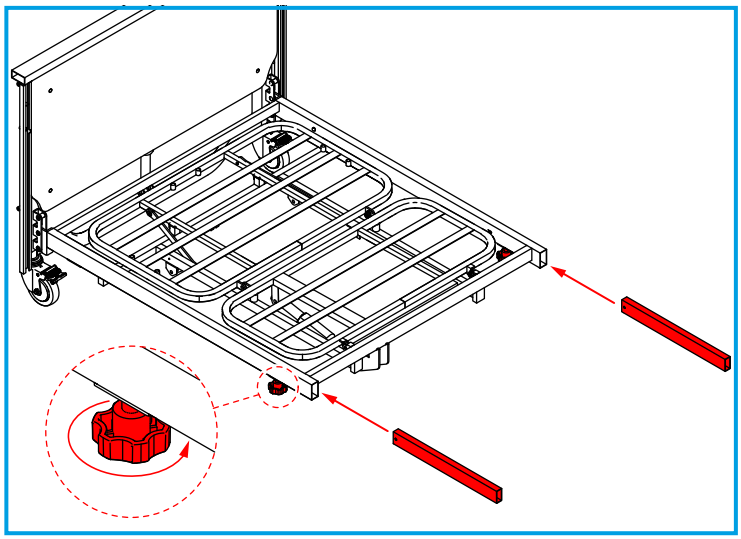

1. Lock the foot end castors (refer to Section 10.3).
2. Undo the hand-wheels fully on the foot end mattress platform by turning them anti-clockwise on both sides.

If the hand-wheels are not fully loosened, the platform connectors will not insert fully.

3. Insert the platform connectors as far as they will go.

Do not re-tighten the hand-wheels at this stage.

4. Unlock the head end castors (refer to Section 10.3).

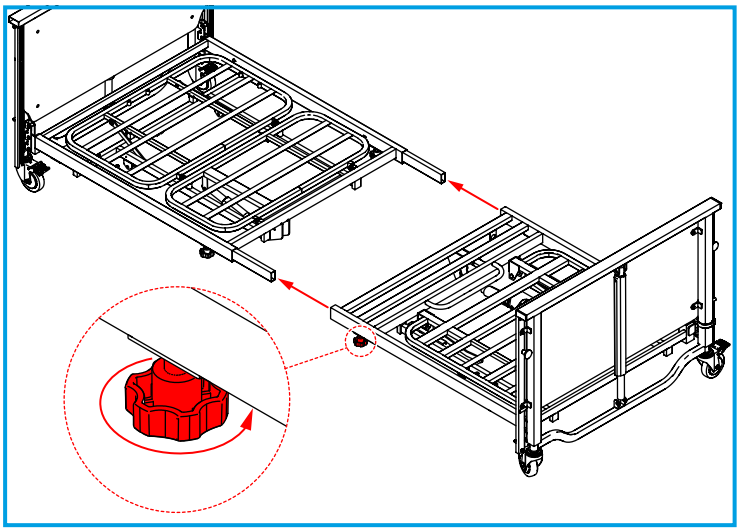

5. Loosen the hand-wheels fully on the head end mattress platform by turning them anticlockwise on both sides.

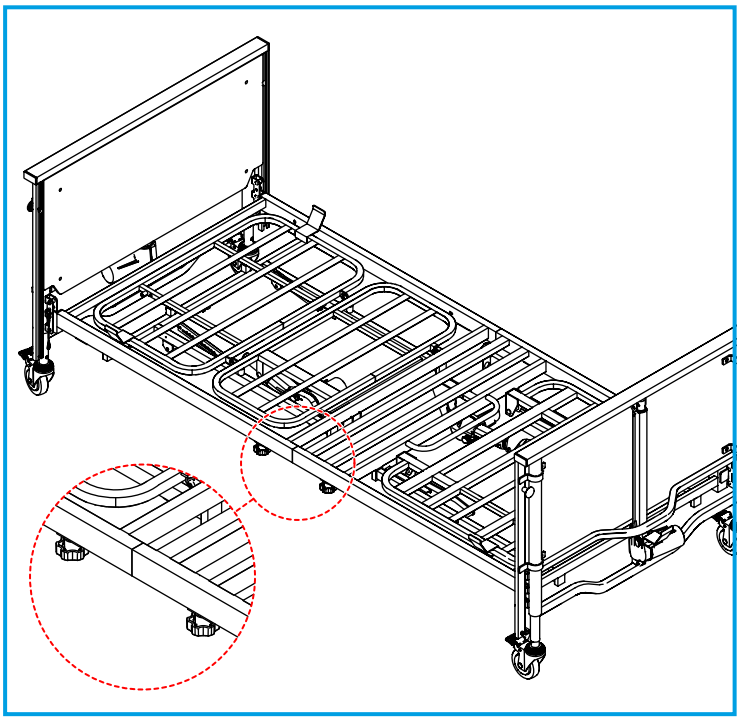

6. Slot the head end mattress platform onto the platform connectors until it is flush with the foot end mattress platform.

If the mattress platforms do not meet, make sure that all 4 hand-wheels have been loosened sufficiently.

7. Once the mattress platforms meet, fully re-tighten all the hand-wheels by turning clockwise.
8. Grip the mattress platform in the middle and shake the frames in an up and down motion, then recheck the hand-wheel tensions.
9. Unhook all rubber retaining straps from the back-rest and the leg/calf-rest.

Fully secure the bed before you go to the next step.

7.4 Connect the Control Box Cables to the Actuators.

The control box cables and actuators have labels 1 to 4. Make sure they are connected correspondingly (refer to the diagram on the next page).

Push firmly the cable connectors into the actuator sockets, or the actuators will not operate.

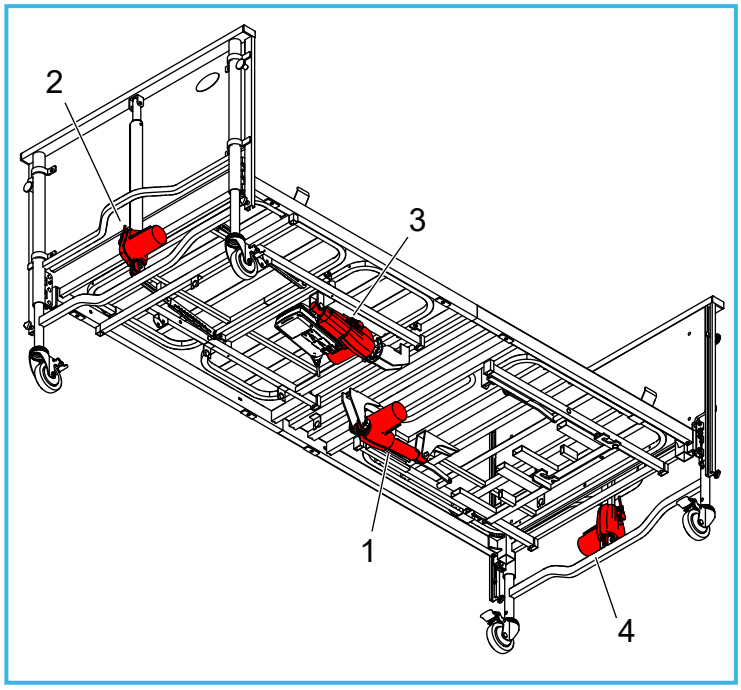

- Cable 1 must be connected into the back-rest actuator (labelled 1).
- Cable 2 must be connected into Hi-Lo actuator at the foot end (labelled 2) of the bed.
- Cable 3 should already be connected (factory fitted) to the leg-rest actuator (labelled 3).
- Cable 4 must be connected into the Hi-Lo actuator at the head end (labelled 4) of the bed.

You must check the bed functions correctly, in accordance with Section 10.4.

If the bed does not function, check the cables are fully pushed in.

If an incorrect section moves when a button is pressed, check all the cables are connected to the correct actuators.

Secure the cables using the cable management clips on the bed frame.

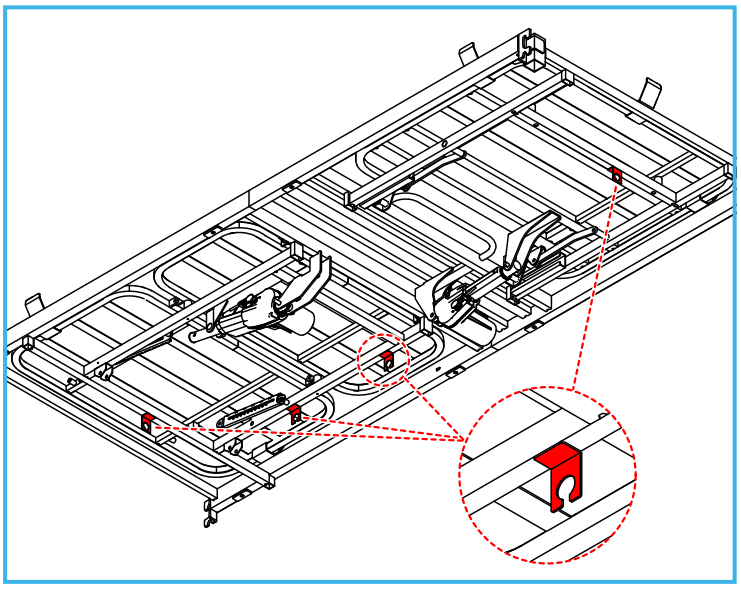

Make sure the cables have not been damaged or become tangled during installation.

Make sure all cables are free of moving parts before use.

7.5 Fit the Mattress Retainers

Fit these retainers before fitting the mattress.

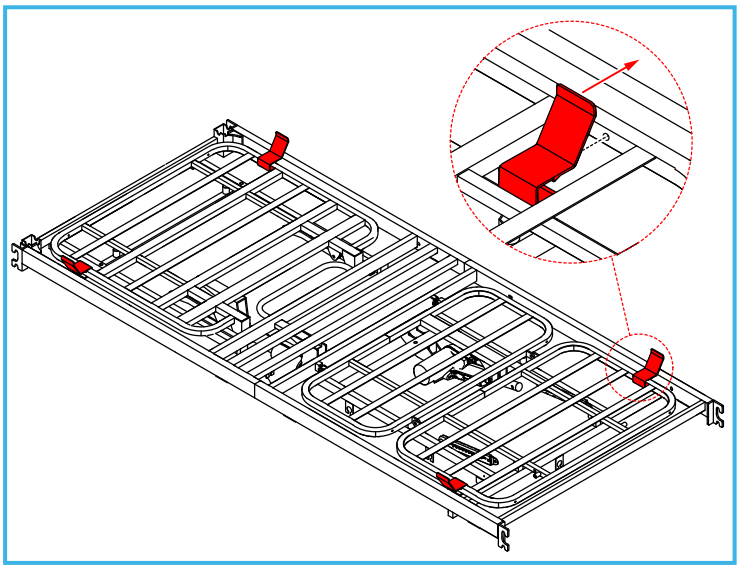

Clip the plastic mattress retainers to the back rest and leg-rest frames in the positions shown.

Fit an additional retainer if extending the bed (refer to Section 9.3).

7.6 Extending the Bed

For taller users, the bed can extend by 150 mm at the foot end of the bed.

Do not extend the bed when it is occupied.

If fitting the 2 and 3-bar steel bed rails, do this before you extend the bed. If fitting the aluminium 3-bar side rails, extend the bed before fitting the rails. See section 8.

1. Remove the mattress.
2. Lock the head end castors (refer to Section 10.3).

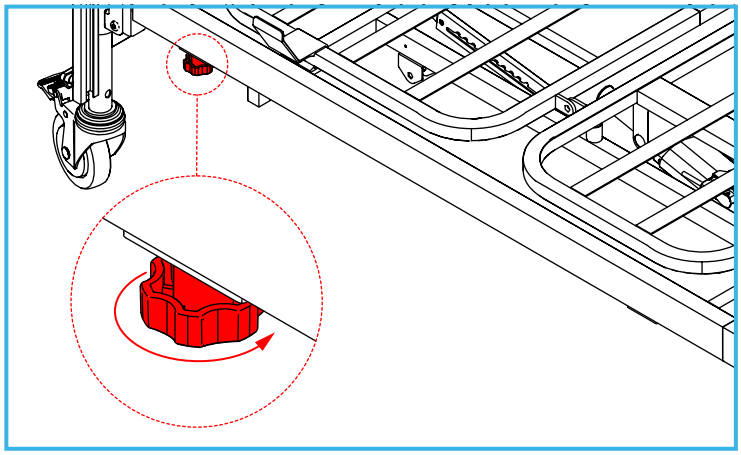

3. Undo the bed extension hand-wheels at the foot end of the bed on both sides.
4. Unlock the foot end castors (refer to Section 10.3).

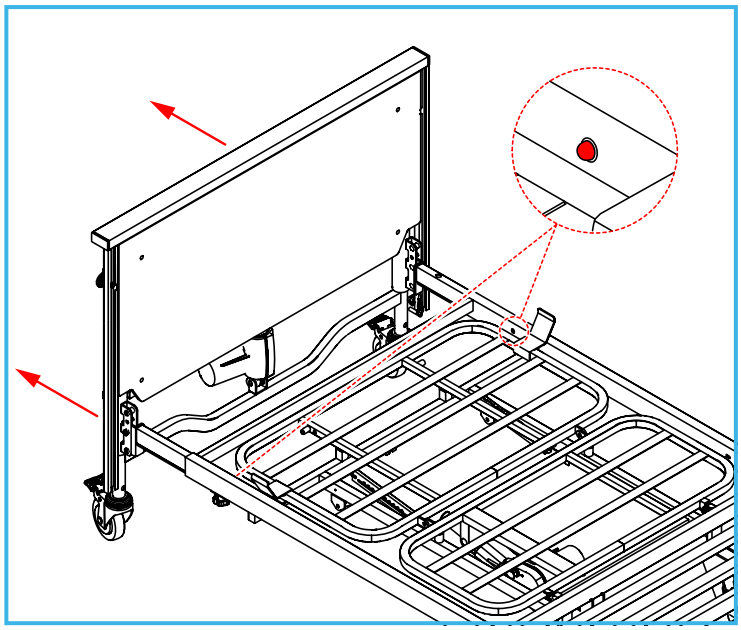

5. Pull out the foot end panel from the foot end mattress platform until the button clips click into place on both sides.
6. Re-tighten the hand-wheels fully.

7.7 Fitting the Mattress Platform Extension Plate (S39212)

Retaining pins hold the Mattress Platform Extension Plate (optional on P78269 and P78293 beds) under the foot end of the bed.

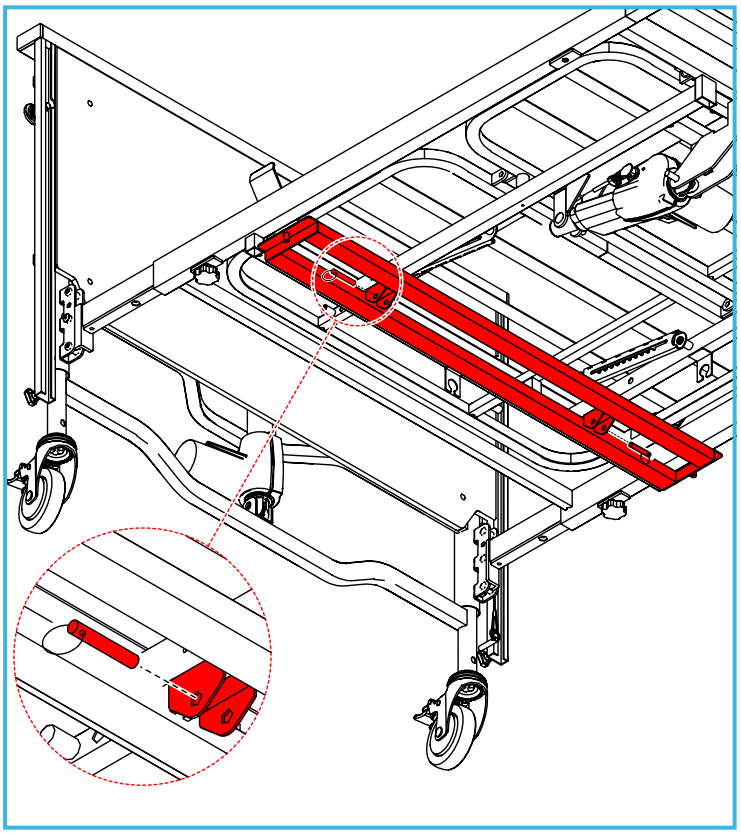

1. To remove the mattress platform extension plate, remove the retaining pins from the storage bracket.
2. When the mattress platform extension plate has been removed, replace the locking pins into the storage bracket.

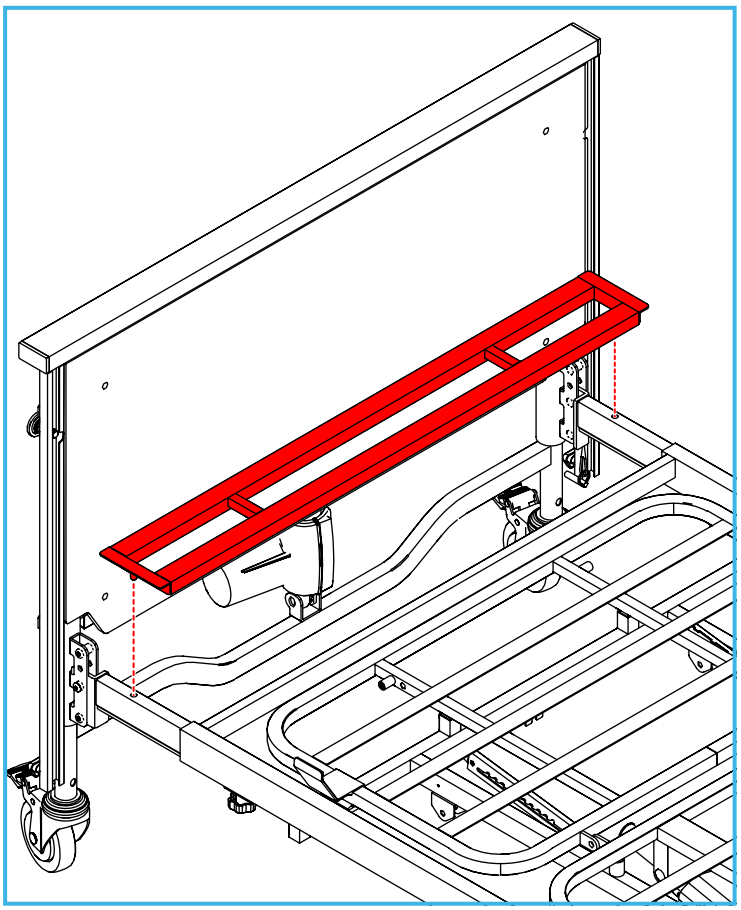

3. Fit the mattress platform extension plate in the position shown.

Make sure the locating pins have fully engaged the holes in the mattress platform.

4. Lock the foot end castors (refer to Section 10.3).

7.8 Shortening the Bed

Do not shorten the bed when it is occupied by the user.

1. Remove the mattress and mattress extension squab.
2. Remove the Mattress Platform Extension Plate and secure in the storage position with the locking pins provided (refer to Section 7.7).
3. Lock the castors at the head end of the bed (refer to Section 10.3).
4. Release the bed extension hand-wheels on both sides of the bed (refer to Section 7.6).
5. Push the button clips in on both sides of the foot end mattress platform (refer to Section 7.6).
6. Unlock the castors at the foot end of the bed (refer to Section 10.3).
7. Push the foot end panel into the mattress platform as far as it will go (refer to Section 7.6).
8. Re-tighten the hand-wheels fully.
9. Lock the castors at the foot end of the bed (refer to Section 10.3).

8 FITTING AND REMOVING THE OPTIONAL SIDE RAILS

NRS recommends fitting the side rails before extending the bed.

NRS recommends using the optional side rail loading channels (P82055) to assist the loading/unloading and transportation of the 2 and 3-bar steel and aluminium side rails (refer to the user instruction supplied with the product).

8.1 Steel 2-Bar Side Rails (S39200)

These rails are optional and compatible with all models of the NRS community bed. They are compatible with mattresses up to 180 mm (7”) thick. Fit them in the same way as the 3-Bar Side Rails.

8.2 Steel 3-Bar Side Rails (P80423)

These rails are optional and compatible with all models of the NRS community bed. They are compatible with mattresses up to 210 mm (8.5”) thick.

1. Raise the bed to the maximum height in accordance with Section 10.4.

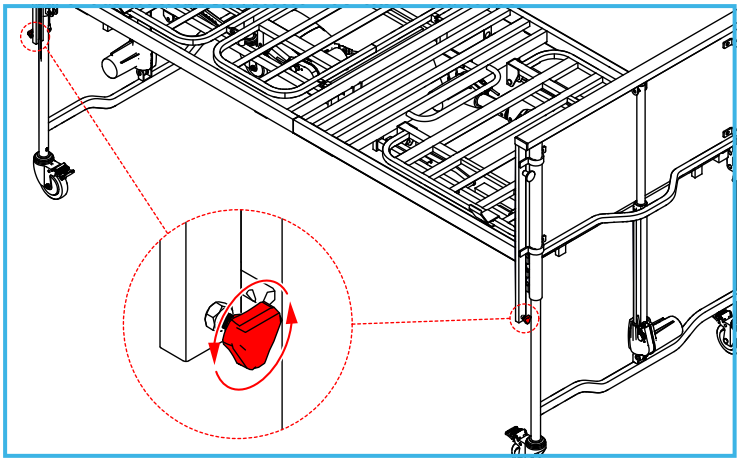

2. Undo the 2 x locking screws on one side of the bed.

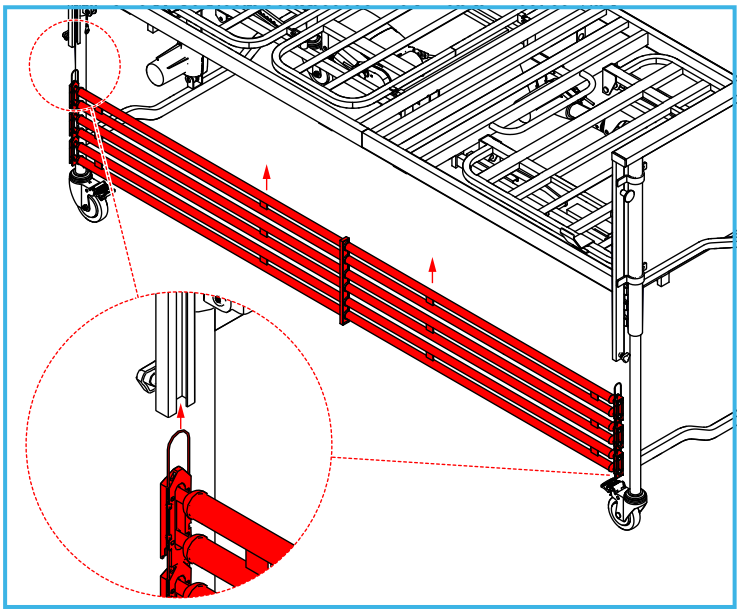

3. Insert the plastic side rail carriages into the side rail channels, taking care not to snag the wires.

Always fit the extending section of the side rail to the foot end of the bed. Make sure the side rail label faces up at the head end of the bed.

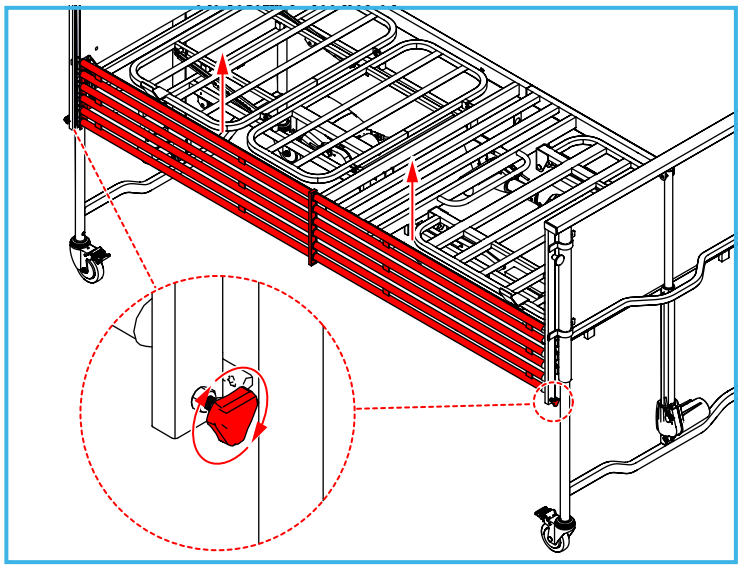

4. While holding the side rail assembly in place, tighten the locking screws at both ends of the bed.

Make sure all locking screws are fully tightened before you go to the next step.

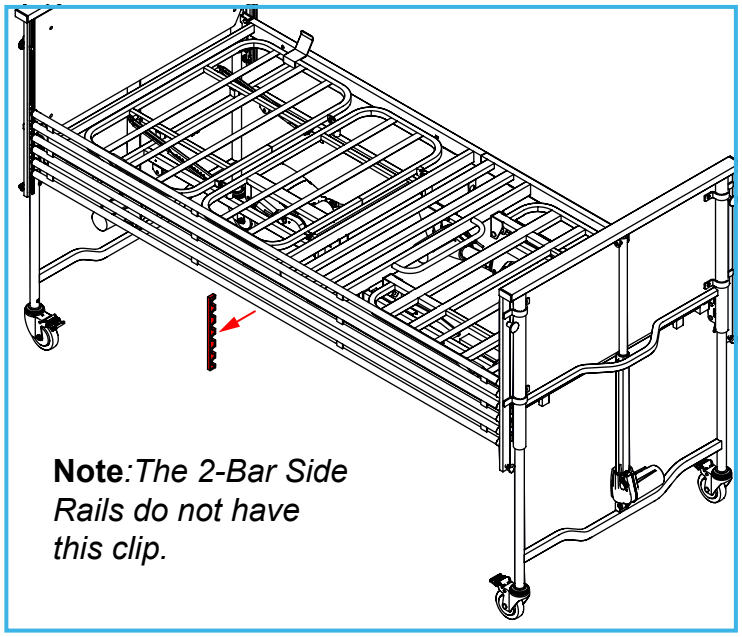

5. Remove the plastic side rail clips (store safely as these will be needed to remove the side rails).
6. Repeat for the opposite side of the bed.

Reverse the above steps to remove the side rail assembly.

To operate the side rails, refer to Section 10.6 & 10.7.

8.3 Aluminium 3-Bar Side Rail (P80563)

These rails are optional and compatible with all models of the NRS community bed. They are compatible with mattresses up to 210 mm (8.5”) thick.

If the bed has been extended you must fit the aluminium side rail extensions (P80575) before installation.

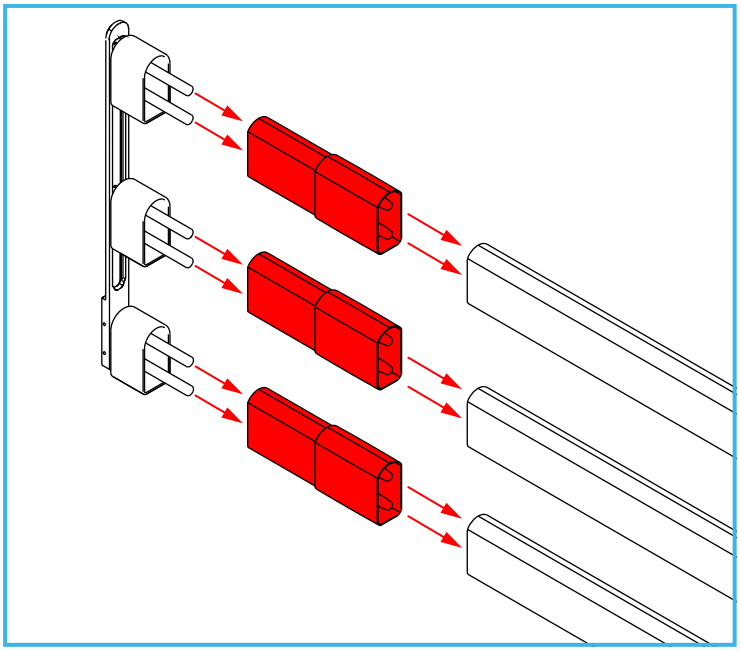

1. Raise the bed to the maximum height in accordance with Section 10.4.
2. Undo the 2 x locking screws (refer to Step 2, Section).

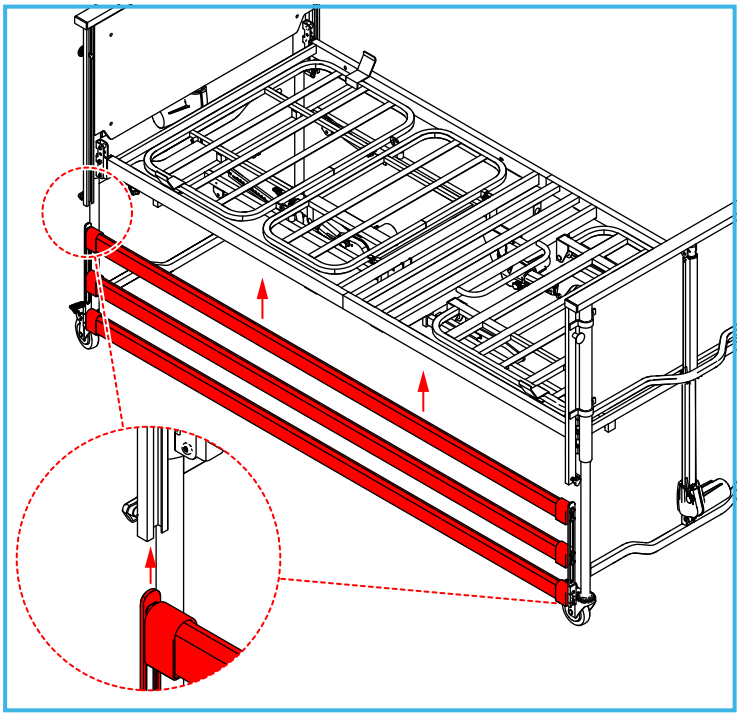

3. Insert the plastic side rail carriages into the side rail channels, taking care not to snag the looped wires.

Make sure the side rail label faces up.

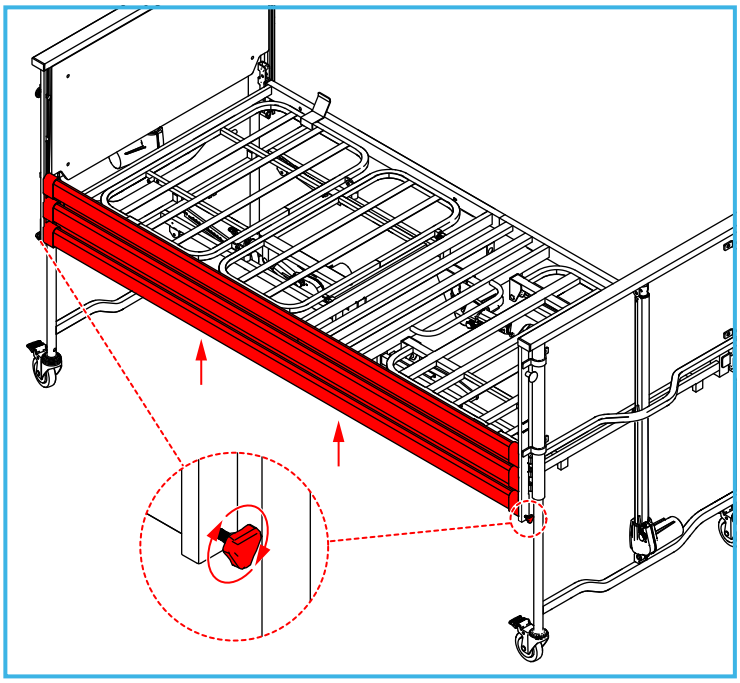

4. While holding the side rail assembly in place, tighten the locking screws at both ends of the bed.

You must make sure all locking screws are fully tightened before you proceed to the next step.

5. Repeat for the opposite side of the bed.

   Reverse the above steps to remove the side rail assembly.

   To operate the side rails, refer to Section 10.6 & 10.7

8.4 Steel 3/4 Folding Side Rails (P80435)

These rails are optional and compatible with all models of the NRS community bed. They are compatible with mattresses up to 210 mm (8.5”) thick.

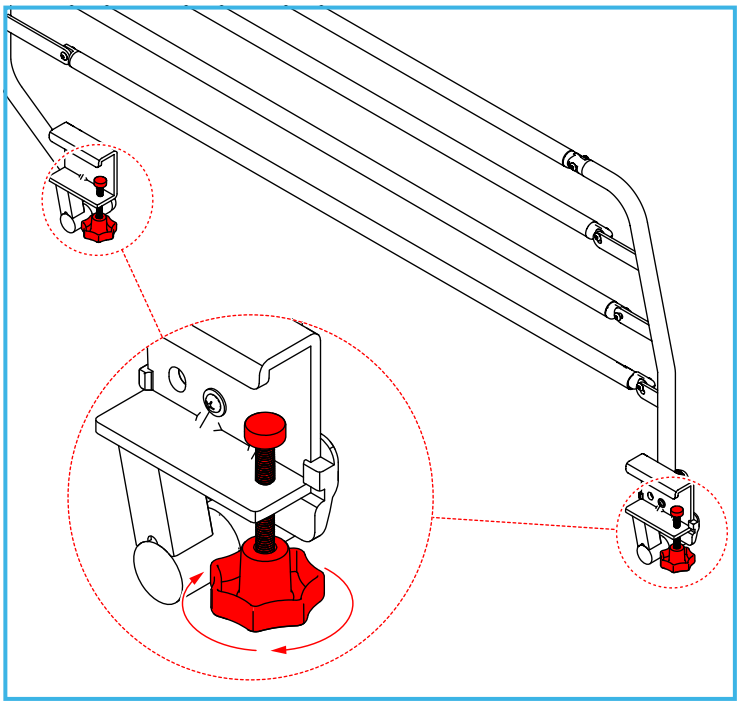

1. Loosen the side rail hand-wheels all the way.

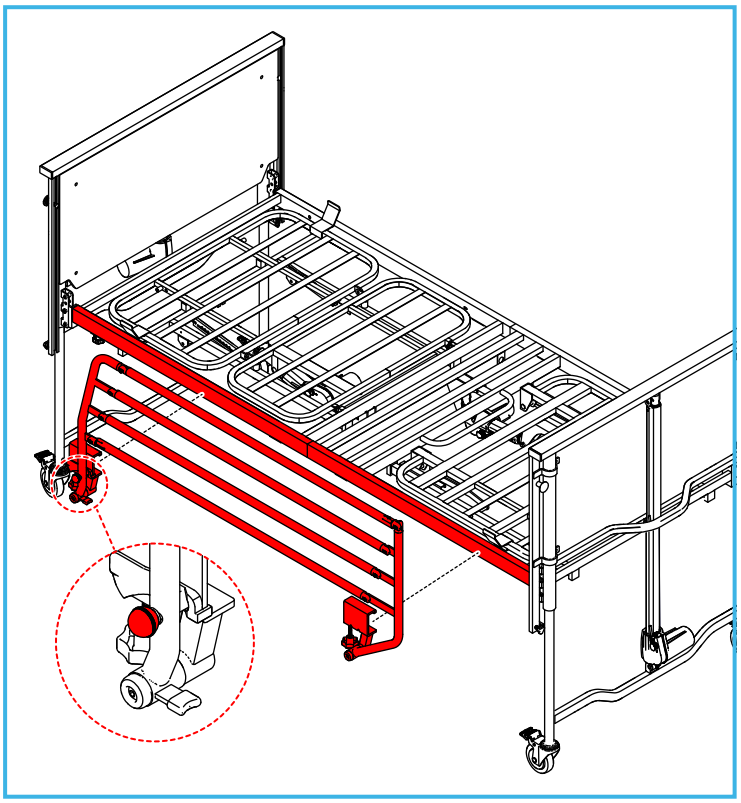

2. Position the side rails so the locking lever knob is always at the foot end of the bed.

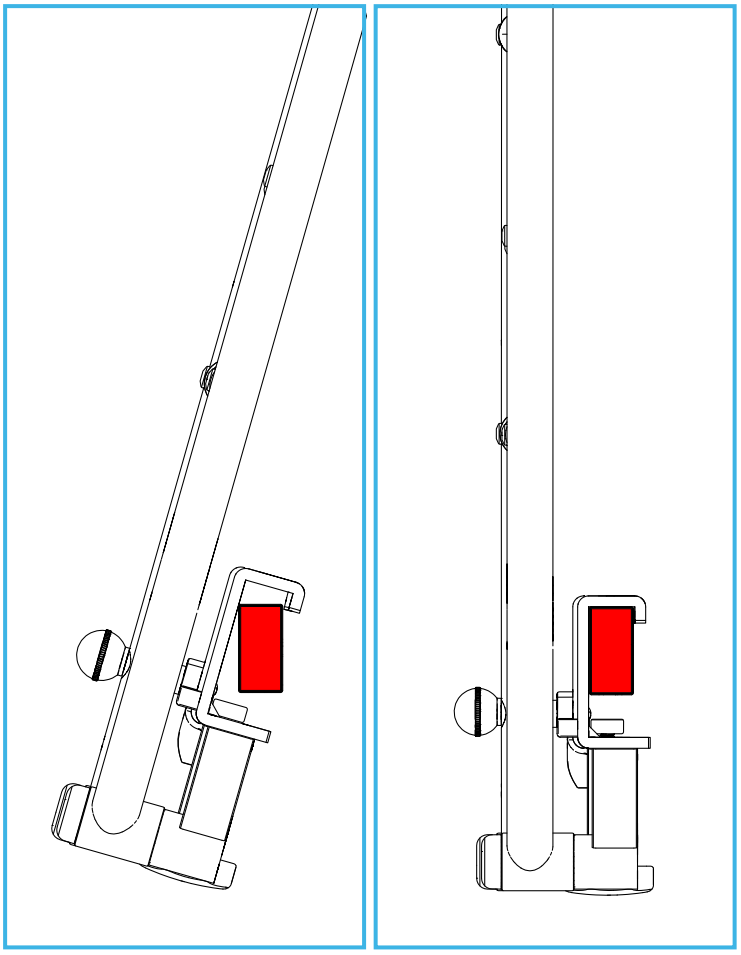

3. Tilt the side rail forward and clip over the bed platform, then slide the bottom fixing under the bed platform by straightening up the side rail.

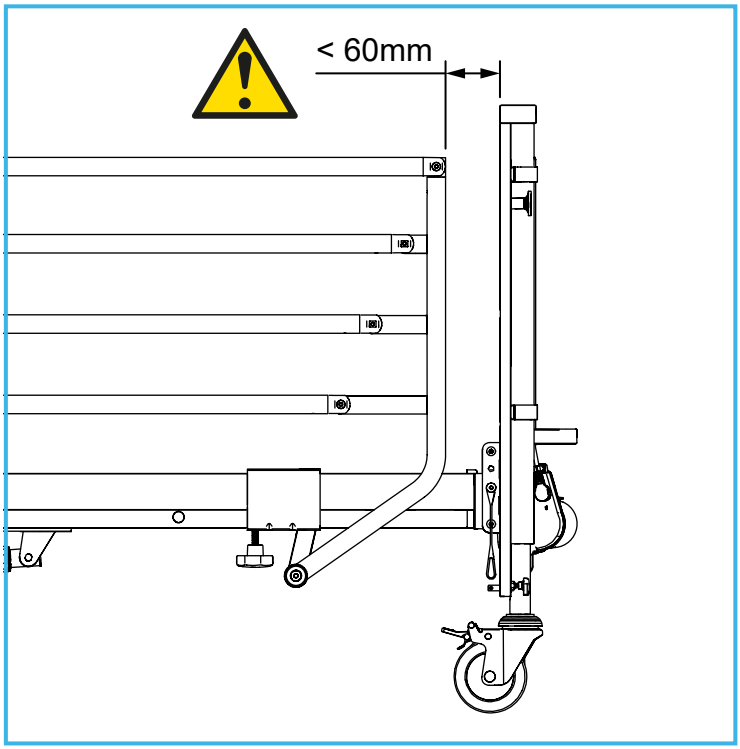

Warning - Entrapment Risk!
The gap between the side rail and the head end must be less than 60 mm.

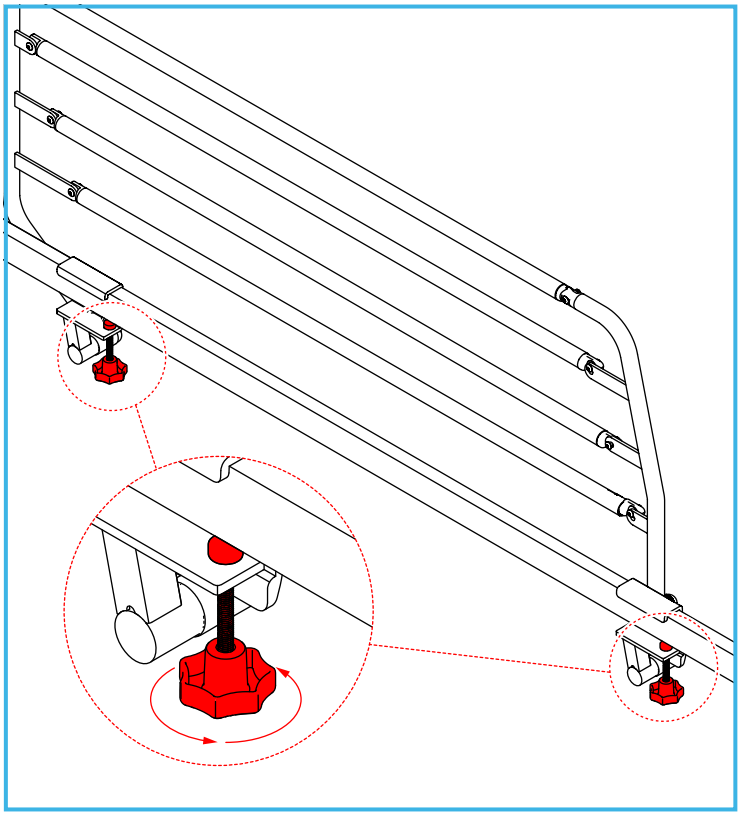

4. Fully tighten both hand-wheels.

You must make sure all hand-wheels are fully tightened before you proceed to the next step.

5. Repeat for the opposite side.

Reverse the above steps to remove the side rail assembly.

To operate the side rails, refer to Section 10.8 & 10.9

9 FITTING THE MATTRESS

9.1 Mattress Selection

The NRS community bed has been designed to accommodate a 2000 x 900 mm mattress.

A risk assessment must be carried out on the user to make sure the correct mattress type is selected.

If an alternating pressure type mattress has been selected, the air pump must be fitted to the foot end of the bed.

Make sure that all air pump air hoses and electrical cables are kept well clear of the moving parts of the bed.

If you are using straps to secure the mattress, do not tie to any fixed part of the bed frame as this will cause damage to the actuators and mattress. You must make sure they are tied to the back-rest frame or leg-rest frame as shown below.

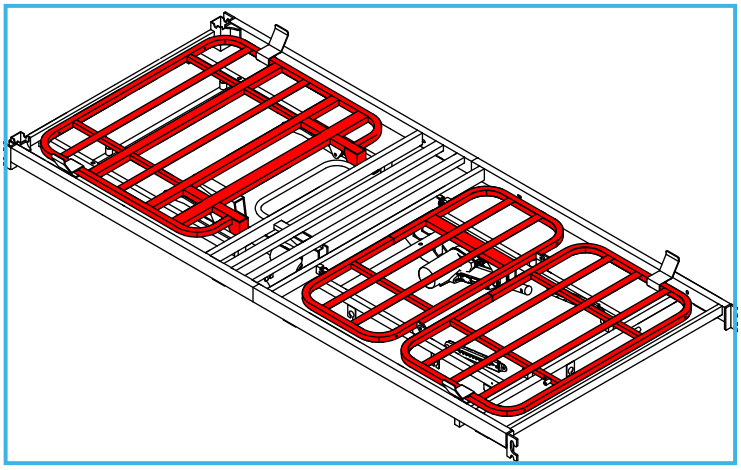

9.2 Fit the Mattress to the Bed

1. Check the mattress platform has been set to the correct height for the thickness of mattress (refer to section 7.1).
2. Fit the mattress to the bed.
3. Make sure the mattress is securely fitted inside of the mattress retainers.

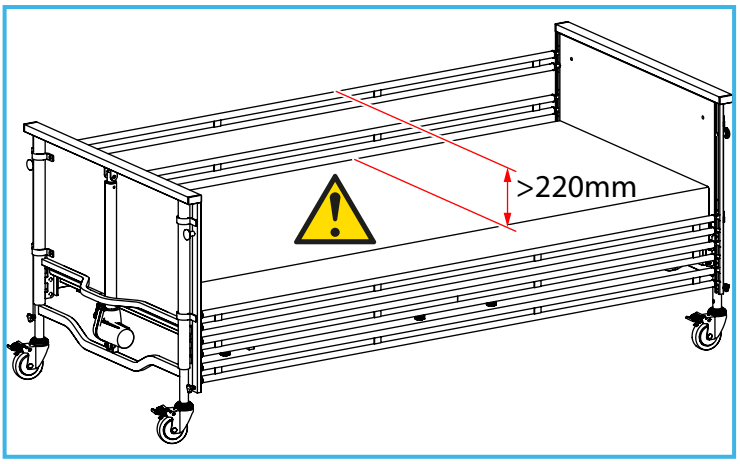

If optional side rails are fitted, it is essential that once the mattress is fitted to the bed and the side rails are raised, there is at least 220 mm from the top of the mattress to the top of the side rails.

Check that all moving parts of the bed can move freely before operating the bed.

9.3 Fit the Mattress to an Extended Bed

You need a 900 x 150 mm mattress squab infill to fill the gap between the mattress and the head end panel.

You need an additional mattress retainer (P81245) at the head end of the back-rest to secure the mattress squab infill.

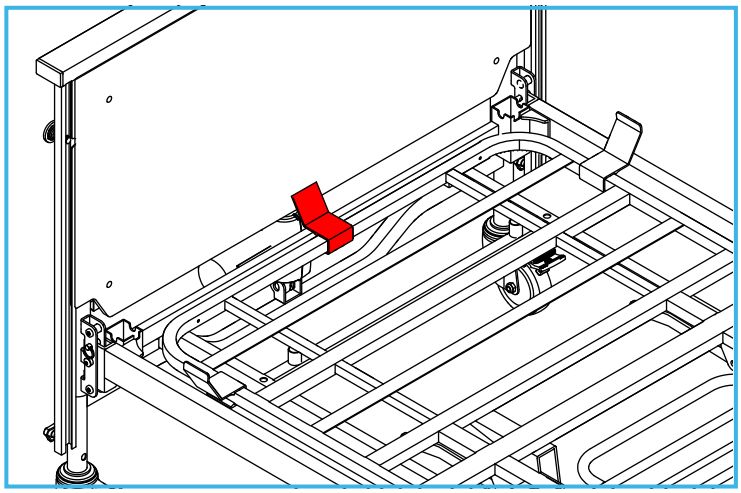

1. Fit the additional mattress retainer.

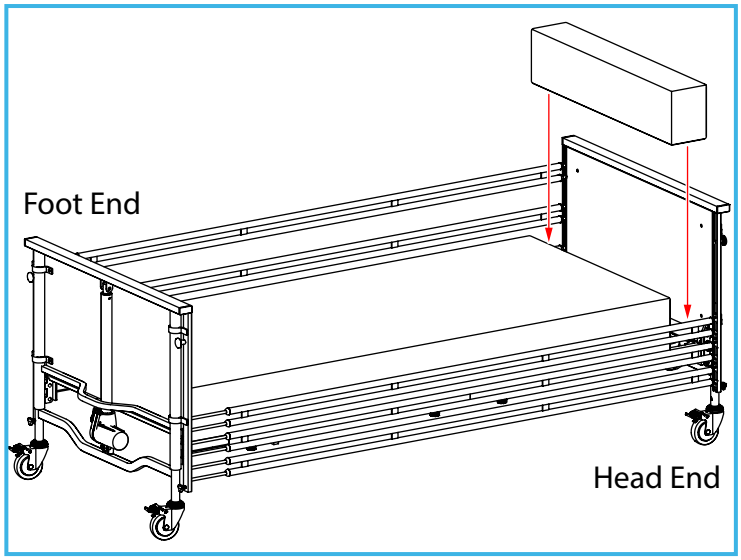

2. Put the mattress at the foot end of the bed.
3. Insert the mattress squab at the head end of the bed.

Always put the mattress squab at the head end of the bed.

4. Make sure the mattress and mattress squab fit securely inside of the mattress retainers.

10 BED OPERATIONS

10.1 Special safety warnings

To avoid serious injury, make sure all non-user personnel are clear of the bed.

Make sure all user body parts are clear of entrapment hazards before making any bed adjustments.

Make sure that any installed accessories can not cause injuries to the user during bed adjustments.

The risk assessment must consider the users ability to safely operate the bed. If the user is unable to safely operate the bed, the handset must be locked out when not in use or stored out of reach of the user. Refer to Section 10.4 for the operation of the Handset lock-out function

To avoid damage, make sure that all cables and accessories are clear of the moving parts before operating the bed.

Make sure the power, motor and hand-control cables have not been damaged during assembly.

To prevent overheating of the actuators, only operate the bed for a maximum of 2 minutes, before leaving for 18 minutes rest.

10.2 Pre Operation Checklist

Before using the bed:

- Make sure that the bed castors are locked (refer to Section 10.3).

Trendelenburg functions need the castors to be unlocked at one end of the bed (refer to Section 10.4.5, 10.4.6 and Section 10.3).

- Make sure that the power supply is compatible with the bed (230 V, 50 Hz).
- Make sure the power cable is plugged in and positioned away from danger or moving bed parts.
- Check the bed electrical functions, in accordance with Section 10.4, before use.

10.3 Locking the Castors

The bed has four swivel castors that can be independently locked. Locking the castors locks the rotation and swivel of the castor.

Note: *The castors are not the same for each bed. Refer to the section applicable to your bed (Standard or Low).*

Standard Bed Castors (P78269 & P78271)

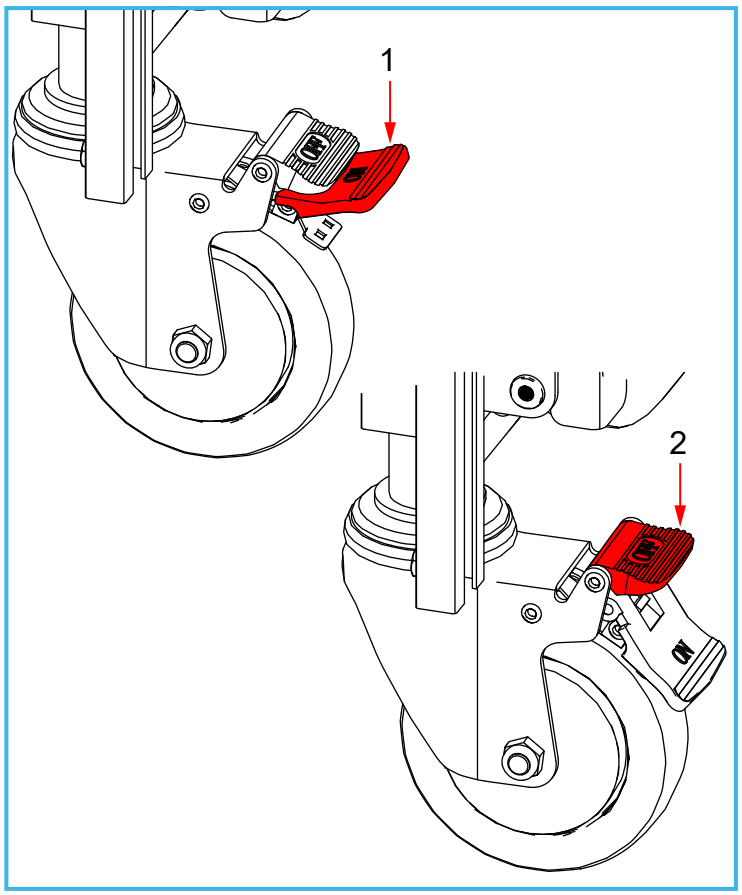

1. Push the ‘on’ lever to lock the castors.
2. Push the ‘off’ lever to unlock the castors.

Low Bed Castors (P78283 & P78295)

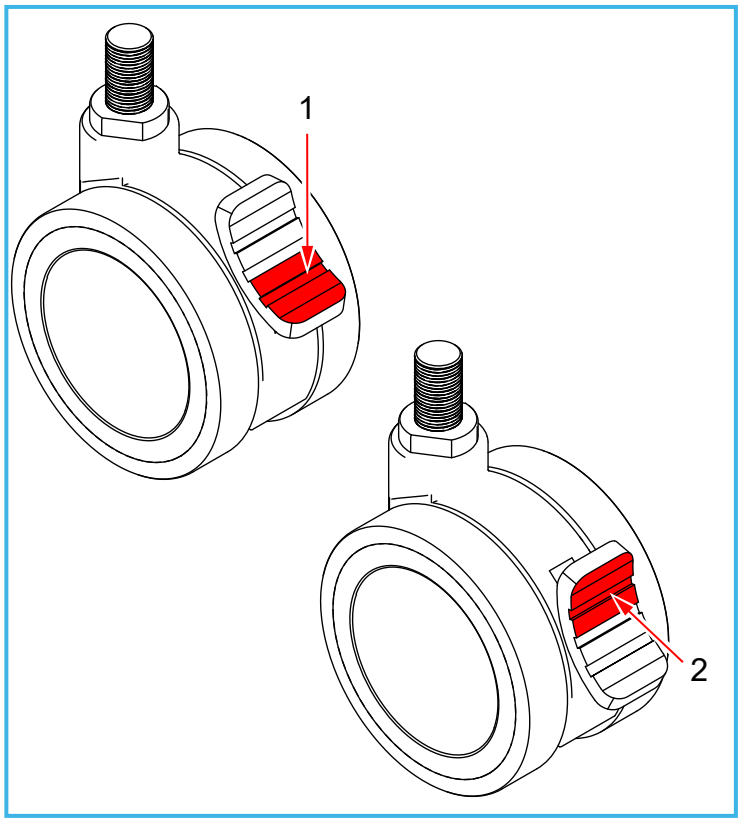

1. Push the toggle lever down to lock the castors.
2. Push the toggle lever up to unlock the castors.

10.4 Handsets

A 10-button Handset operates the electric parts of the bed. We also offer an optional 9-button Handset (P81221) which does not have the Trendelenberg function.

10.4.1 Back-rest adjustment

Use these buttons to change the angle of the back-rest.

On the NRS Community Bed Plus (P78271 & P78295) the back-rest features auto-regression, this reduces shear between the user and the mattress.

10.4.2 Leg-rest adjustment

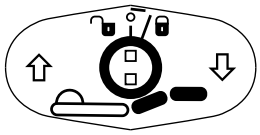

Use these buttons to change the angle of the leg-rest (knee break).

10.4.3 Auto-Contour

Use these buttons to change the angle of the back-rest and leg-rest simultaneously.

10.4.4 Height adjustment of the mattress platform

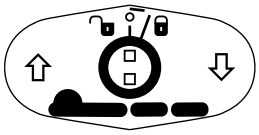

Use these buttons to adjust the mattress platform height.

10.4.5 Reverse Trendelenburg

Unlock the foot end castors on both sides before operating this function (refer to Section 10.3).

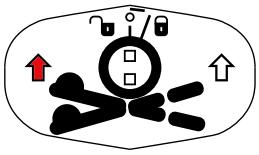

Press the left button to lower the foot end of the mattress platform.

This position elevates the users head above the feet.

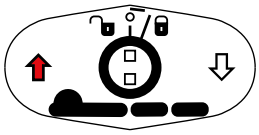

To return the bed to a level position press the up button (show image for height adjustment)

10.4.6 Trendelenburg

Unlock the head end castors on both sides before operating this function (refer to Section 10.3).

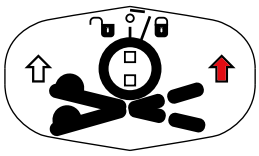

Press the right button to lower the head end of the mattress platform.

This position elevates the users feet above the head.

Trendelenburg Tilt is a potentially dangerous position for some users and should only be used following a risk assessment by a suitably qualified person.

Lock-out this function to prevent accidental use.

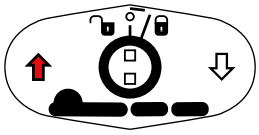

To return the bed to a level position press the up button.

10.4.7 Handset Lock-Out

Each pair of buttons on the handset can be individually locked out to prevent unwanted operation.

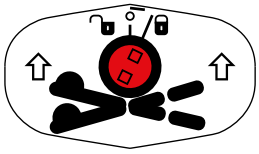

Using the blue key provided with the handset you can turn the central lock to either UNLOCKED (12 o'clock position) or LOCKED (1 o'clock position).

Store the lock-out key separately from the handset to avoid accidental activation of unwanted functions.

Replacement handset lockout keys are available (P81919).

10.5 Adjusting the Calf Angle

Calf angle adjustment is only available on the NRS Community Bed Plus models (P78271 & P78295).

1. Raise the Leg-rest

Raise the leg-rest angle to the angle you need in accordance with Section 10.4.2.

2. Raise the Calf Section

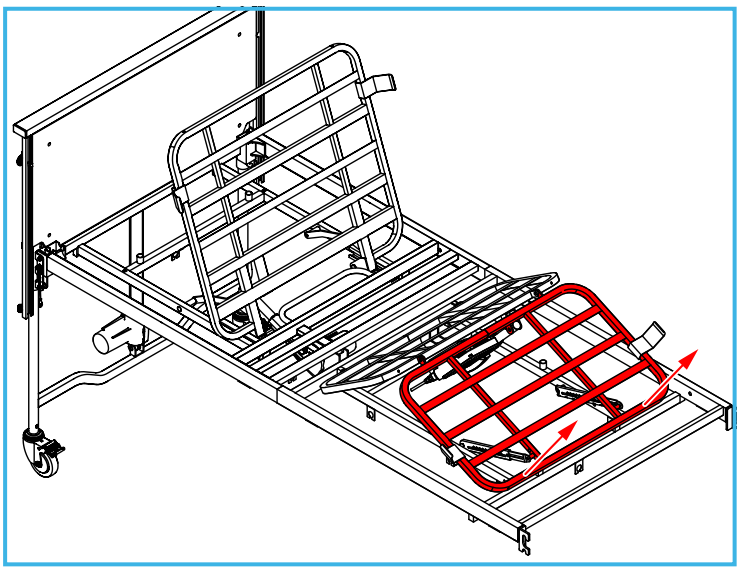

Manually lift the end of the calf section until you reach the angle you need.

Make sure the calf section has clicked into place before you release.

3. Lower the Calf Section

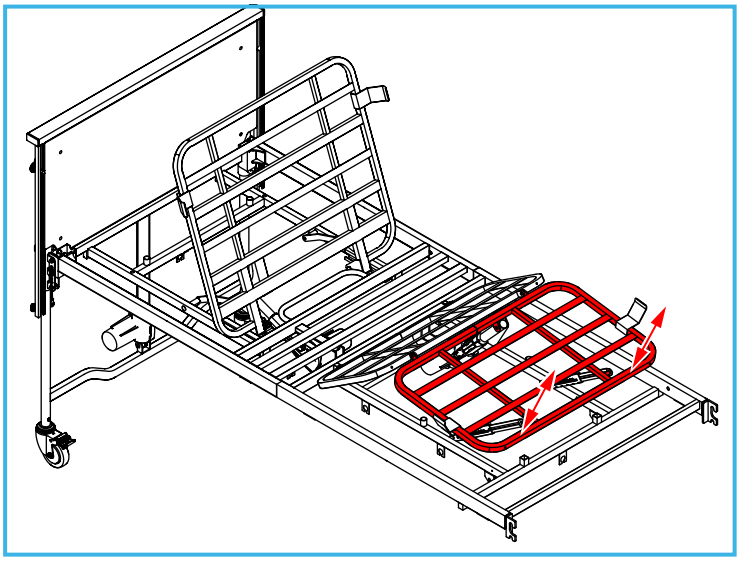

Manually lift the end of the calf section to the highest point (this releases the catch) then lower.

Do not let go of the calf section as you lower as it will drop suddenly.

We recommend lowering the calf section before lowering the leg-rest (refer to Section 10.4.2).

10.6 Raise the Side Rails (2 and 3-Bar Steel and 3-Bar Aluminium)

The 2 and 3-bar steel and 3-bar aluminium side rails operate in the same way. The next steps show the 3-bar steel side rails as an example.

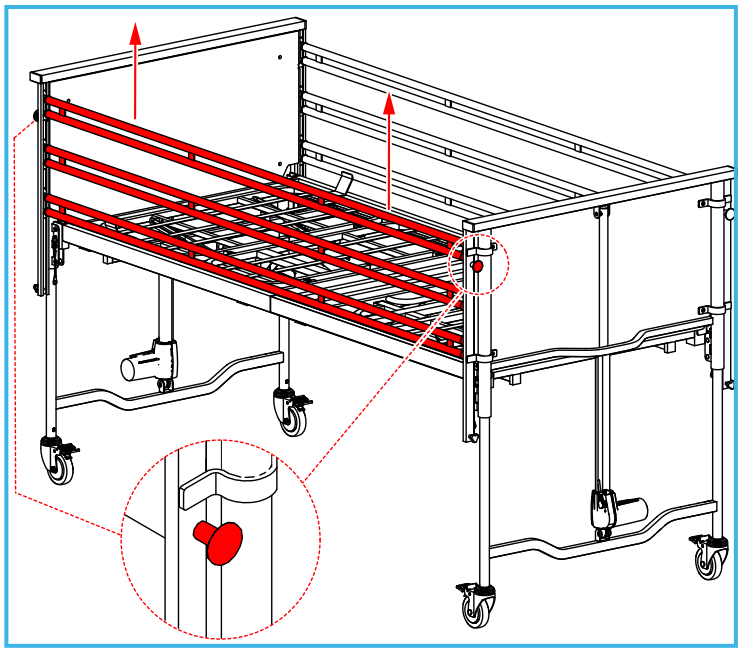

Lift the top rail of the side rail assembly all the way up until it clicks past the spring-plungers at both ends of the bed.

Check that the rails are secure at both ends before you release them.

10.7 Lower the Side Rails (2 and 3-Bar Steel and 3-Bar Aluminium)

Fully tighten the locking screws at the bottom of the side rail channels before you do the next steps (refer to Section 8.2).

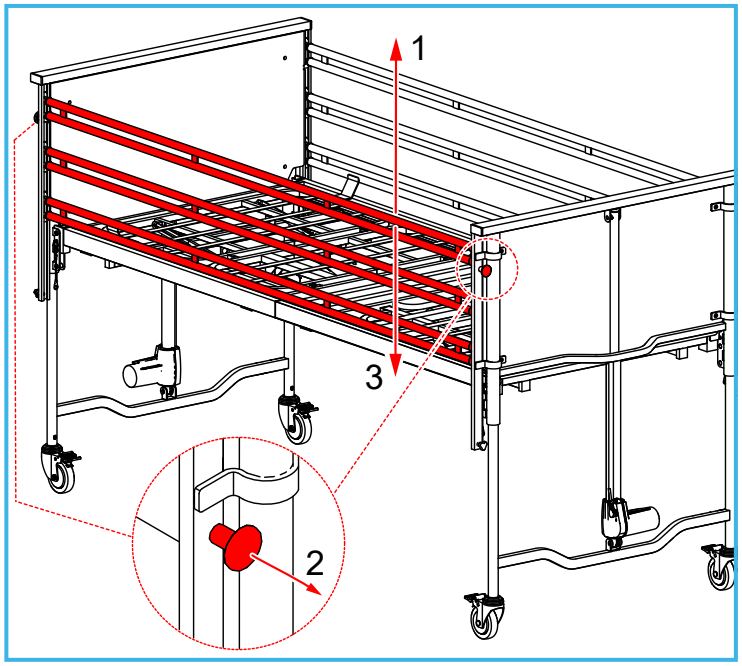

1. Lift and hold one end of the side rail.
2. Pull the spring-plunger to release the side rail.
3. Gently lower the side rail.
4. Repeat steps 1 to 3 for the other end of the side rail.

10.8 Raise the 3/4 Folding Side Rails

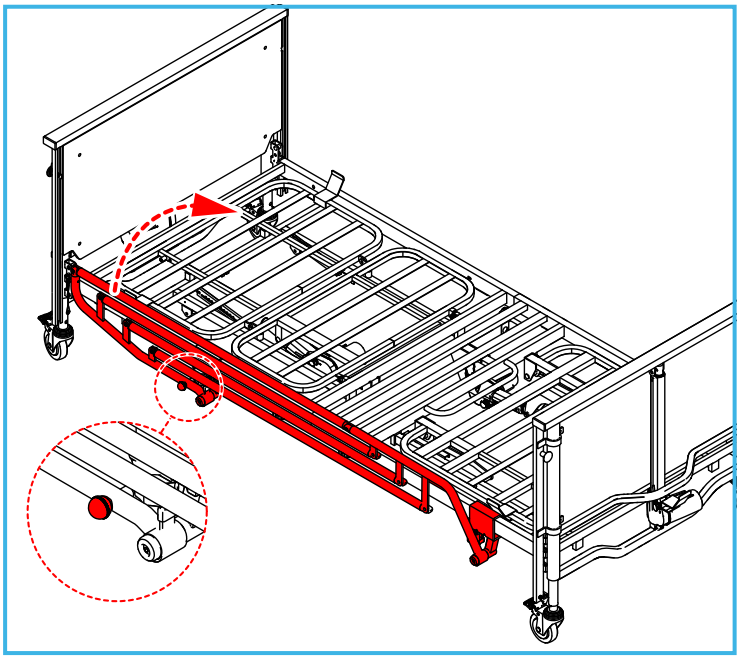

Lift the top rail of the side rail assembly all the way up until the sprung knob clicks into place.

Check the sprung knob has fully engaged before you release the bed rail.

10.9 Lower the 3/4 Folding Side Rails

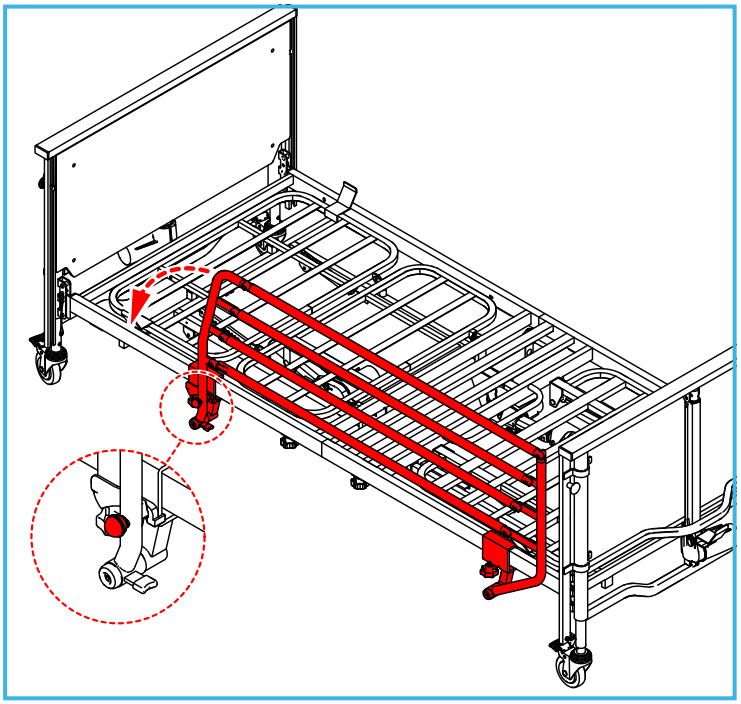

1. While holding the top rail, pull the sprung knob to release the rail assembly.
2. Gently lower the rail assembly taking care not to trap your fingers.

Check the fittings are fully secure every day or before and after each use.

11 ACCESSORIES

11.1 Use of accessories

NRS can supply various accessories for use with this bed.

NRS do not recommend using third party spares or accessories (excluding mattresses) as this can cause serious injury or damage to the bed.

The warranty does not cover damage caused using third party accessories. Using third party accessories can invalidate your warranty.

If third party accessories are needed, the owner must do a risk assessment.

Installed third party accessories must not affect or impede the bed functions in any way.

The following accessories are available for use with the bed. The owner must do a risk assessment to assess their suitability for the user.

11.2 Steel 2-Bar Side Rail (S39200) and Steel 3-Bar Side Rail (P80423)

The steel 2 and 3-bar side rails can be fitted both sides to prevent accidental falls. The rails can be raised or lowered and locked in place. Refer to section 8 for installation and 10.6 / 10.7 for operation.

11.3 Aluminium 3-Bar Bed Rail (P80563)

The aluminium 3-bar bed rails can be fitted both sides to prevent accidental falls. The rails can be raised or lowered and locked in place. Refer to section 8 for installation and 10.6 / 10.7 for operation.

11.4 3 Bar Aluminium Extensions (P80575)

The aluminium 3-bar bed rail extensions are required when extending the bed.

11.5 Side Rail Loading Channels (P82055)

For use with the loading, unloading and transport of the 3-Bar steel and aluminium Side Rails.

11.6 Steel 3/4 Folding Side Rails (P80435)

Refer to section 8 for installation and section 10.7 for operation.

11.7 Cot Bumper for full length Side Rail (P81219)

11.8 NRS Community Bed End Panel Bumpers (S33659)

11.9 NRS Community Bed Grab Handle (P94367)

The grab handle can be installed to provide stable support to assist users getting into and out of bed. It can also be used to aid repositioning when lying in bed. The grab handle is compatible with any of the above side rails.

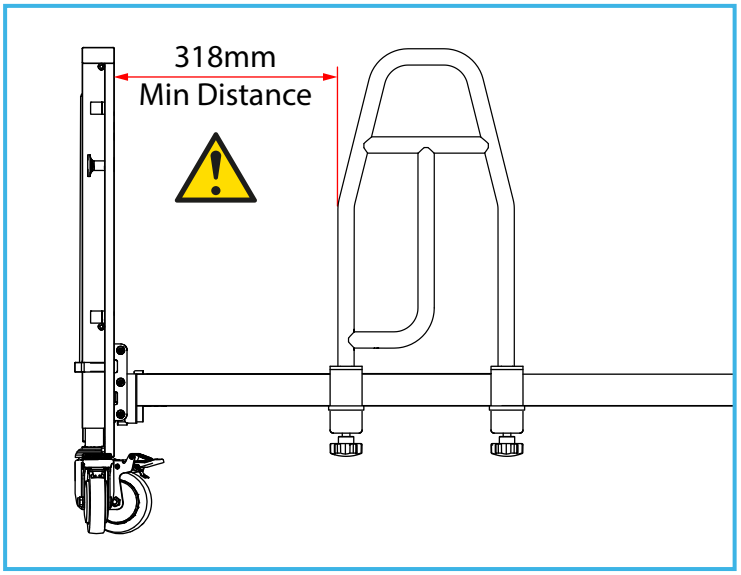

The grab handle must be installed before fitting the side rails.

Refer to user instructions supplied with the grab handle for installation and use.

Check the grab handle does not interfere with the raising and lowering of the mattress platform or side rails (where fitted).

11.10 Lifting Pole (P80599)

A lifting pole is available to help the user to re-position themselves in bed. It fits to one of two holes in the mattress platform at the head end of the bed.

Refer to user instructions supplied with the lifting pole for installation and use.

The lifting pole has a safe working load of 76.5 kg.

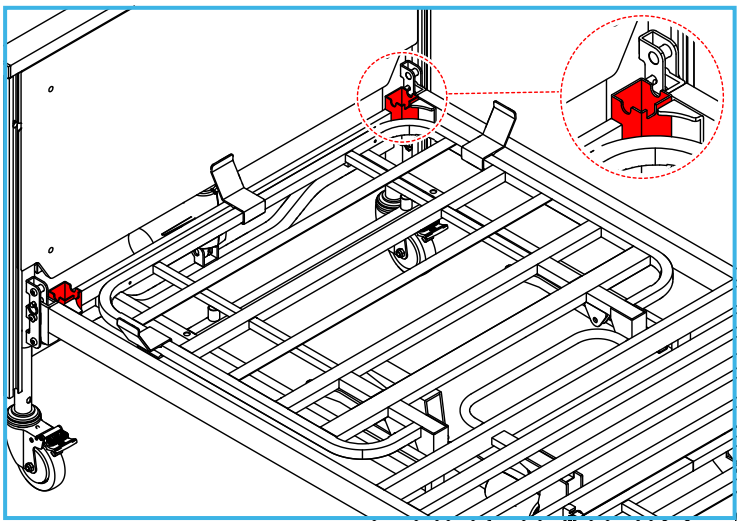

11.11 Battery Back Up (P80605)

This enables emergency operation of the bed for 1-2 cycles following a mains power failure.

Refer to user instructions supplied with the product for installation and use.

11.12 9 Button Handset (P81221)

The 9 Button Handset excludes the Trendelenberg function.

11.13 End Panel Covers (P81920)

The NRS Healthcare Community bed can be fitted with optional wooden bed end panel covers. These can be easily fitted to both the head and foot ends using the 4 hexagon head bolts (provided with the panels).

11.14 Mattresses

NRS Healthcare can supply a number of foam and dynamic mattresses suitable for the bed.

Refer to section 9 for permissible mattress thickness.

12 CLEANING AND DISINFECTING

12.1 General information

Cleaning and disinfection are an essential part of the user care and product service.

The bed must be cleaned and disinfected regularly during the users care.

The bed must be thoroughly cleaned, disinfected and inspected by the owner of the bed before re-use to a new user.

Before you start cleaning

Remove the electric plug from the wall socket and make sure it does not come into contact with water or disinfectant.

To avoid water or cleaning fluid ingress, you must do the following:

- Make sure that all electrical connections are fully secure.
- Make sure there is no damage to any of the electrical components.
- Do not use a water jet, high pressure cleaner or similar. Cleaning must only be done with a damp cloth.

Check all electrical items for water ingress before you put the bed back into service.

If you think water or moisture has entered an electrical component you must remove the power plug from the socket immediately and remove the bed from service.

Identify the item with a “faulty” sign and make sure the bed cannot be used. Report the faulty item the owner of the bed immediately.

Failure to follow these safety instructions can lead to serious damage to the bed.

12.2 Cleaning the Bed

Do not use high pressure water or steam cleaning.

Remove the bedding and mattress.

Clean all surfaces including the mattress platform, hand control and cables using a general purpose, neutral detergent and warm water applied to a damp cloth.

Start the cleaning at the upper sections of the bed moving towards the lower sections. Clean the castors last.

Pay particular attention to user and carer contacting surfaces such as the handset.

Allow the cleaned parts to thoroughly dry before disinfecting / replacing the mattress / returning the bed to use.

To avoid damage to the bed surfaces, do not use abrasive cleaning products, solvent based cleaning products, stainless steel cleaners or cleaning pads.

Damage to paintwork caused by aggressive cleaning can cause corrosion, the bed must be returned to the owner of the bed for repair or disposal.

12.3 Disinfecting the Bed

Thoroughly disinfect the bed after cleaning (refer to section 12.2).

Use disinfectant wipes or wet cloth using a dilute bleach solution at a concentration of 1,000 parts per million (0.1%) available chlorine.

Other disinfectants can be used, but it is the responsibility of the owner to check their safety and compatibility with the bed.

13 INSPECTION AND MAINTENANCE

This product is subject to wear and tear during use. To ensure its safe operation, the care provider and product owner must do regular inspections and maintenance at the intervals shown below.

This list indicates the minimum recommended level of inspection and maintenance. Do more frequent inspections when the product is subject to heavy use or aggressive environments, or where required by local regulations.

Failure to do these inspections or maintenance, or continuing to use the product when a fault is found, may compromise the safety of both the user and care provider.

13.1 Inspections by the Care Provider

The care provider should check the product at the intervals below.

If any faults are found, stop using the product and contact the owner of the product. Do not attempt to repair the product.

Inspections by the Care Provider	Daily	Weekly
Check the operation of the side rails	X	
Check the power supply cable and mains plug	X	
Check the operation of the bed (test all bed functions)		X
Check the condition of the handset cable		X
Check the operation of the castors and brakes		X
Check for any loose or missing parts		X
Check for any gaps between the mattress and side rails		X
Check the mattress for damage		X
Check the bed frame for damage		X
Check any accessories (e.g. grab rails) are securely fitted		X

13.2 Basic fault-finding by Care Provider:

Problem	Possible Cause	Solution
Bed does not operate at all	Power cable disconnected	Plug in power cord
	Socket switched off	Switch on socket
	Faulty parts	Contact Owner
Bed fails to move fully	Bed or part of bed is hitting obstacle	Check bed is free of obstacles
	Mattress is secured to the mattress platform	Remove the securing straps from the mattress platform and secure to the back-rest frame or leg-rest frame (refer to Section 9.1)
Some bed functions do not work	Faulty handset or actuator	Contact Owner
	Actuator cable unplugged	Check all cables are plugged in. If a cable is loose, plug it into the actuator with the same number as the cable (refer to section 7.4)
	Handset function locked out	Unlock handset
Full length Side Rails will not lower	Rail not lifted before pulling spring plunger	Lift rail
Bed operates noisily	Faulty components	Contact Owner

13.3 Inspections and Maintenance by the Owner

The owner must thoroughly clean, disinfect and inspect the bed before re-use to a new user, or annually (whichever comes first).

If any faults are found that cannot be rectified, withdraw the bed from use.

Disconnect the mains supply before doing any electrical repairs. Electrical repairs should be done by a fully qualified electrician in accordance with standard VDE 0751-1:2001-10.

Inspections by the Owner	Each Issue and Annually
Check the operation of the side rails – can they slide freely / lock securely	X
Check the power supply cable and mains plug, and if damaged replace the entire assembly	X
Check the condition of the handset and cable and replace if damaged	X
Check all actuator cables and replace if damaged	X
Check all bed functions through the full range of movement, and check for any worn or damaged hinges	X
Check all actuators for full range of movement, excessive noise and vibration and replace if faulty	X
Check the free rotation & swivel of the castors	X
Check all 4 castor brakes operate correctly	X
Check for any loose or missing parts, including all nuts, bolts, clevis pins, knobs, actuator fixings	X
Check the bed extension operates correctly	X
Check the bed frame for mechanical damage and damage to paintwork	X
Check any accessories (e.g. grab rails, lifting pole)	X
Check the battery back-up (if fitted) and replace battery	X
Check all labels are present and readable	X

14 SPARE PARTS

Description	Order Code	Fits Beds/Side Rails
Replacement Castor Ø100 mm x 1	P81233	P78269, P78271
Replacement Castor Ø75 mm x 1	P94288	P78283, P78295
Mattress Retainer Clip x 4	P81245	P78269, P78271, P78283, P78295
End Panel Cap Set x 2	S47907	
Mattress Platform Locking Knobs x 2	S47919	
Mattress Platform Locking Pins x 10	S47920	
Rubber Retaining Straps x 10	S47932	
Actuator Clevis Pin and R-Clip x 1 plus Actuator C Clip x 1	S47944	
Side Rail Locking Knob x 2	S47956	
Side Rail Spring Plunger x 2	S47968	
Mattress joining bars x 2	P96352	
Transport Brackets (pair)	P82043	
10 Button Handset x 1	P95359	
9 Button Handset x 1	P81221	
Handset Locking Key x 5	P81919	
Hi-Lo Actuator (for head end / foot end) x 1	P93338	
Backrest Actuator x 1	P93349	
Leg-rest Actuator x 1	P93351	
Control Box x 1	P93363	
Mains Cable	P93375	
Actuator Cables - Head End x 1, Foot End x 1, Backrest x 1, Leg rest x 1	P93387	
3-Bar Side Rail wires (short x 2 and long x 2)	S47979	P80423
2-Bar Side Rail wires (x 2)	S47981	S39200
Side Rail Loading Channels (pair)	P82055	P80423, S39200
Backrest Connecting Strap (pair)	S49655	P78271, P78295

15 TECHNICAL DATA

15.1 Control Unit and Handset

Type	Linak CA4 Series
Input Voltage and Frequency	AC 230 V +/-10%, 50/60 Hz
Device Type	Class 2 Electrical Device
Ingress Protection	IPX6 Washable
Duty Cycle	10%, max 2 min / 18 min
Handset	Linak HL70
	10 Button Standard, 9 Button Optional

15.2 Actuators

Type	Linak LA27 Series
Input Voltage and Current	24 V (Max 5.0 A)
Rating	6000 N
Ingress Protection	IPX4
Duty Cycle	10%, max 2 min / 18 min
Operating Speed	4.5-5.5 mm/s

16 SPECIFICATIONS

Model:	Community Bed	Community Bed Low	Community Bed Plus	Community Bed Plus Low
Product Code:	P78269	P78283	P78271	P78295
Safe Working Load (SWL)	220 kg / 34 Stone			
Maximum User Weight	180 kg / 28 Stone			
Overall length	2245 mm			
Overall length (extended)	2395 mm			
Overall width (without side rails)	990 mm			
Overall width (with side rails)	990 mm			
Mattress platform length	2000 mm			
Mattress platform length (extended)	2150 mm			
Mattress platform width	900 mm			
Mattress platform min height (low setting)	350 mm	210 mm	350 mm	210 mm
Mattress platform min height (high setting)	400 mm	260 mm	400 mm	260 mm
Mattress platform max height (low setting)	750 mm	610 mm	750 mm	610 mm
Mattress platform max height (high setting)	800 mm	660 mm	800 mm	660 mm
Auto Regression of Back-rest	No		Yes	
Back-rest Angle (min / max)	0-72°		0-72°	
Knee break angle (min / max)	0-33°		0-33°	
Calf angle (min / max)	0-14°		9-29°	
Trendelenburg (optional 10 button handset)	0-12°			
Reverse Trendelenburg	0-12°			
Castor diameter	100 mm	75 mm	100 mm	75 mm
150 mm mattress platform extension	Optional		Standard	
Head End Panel Weight	15 kg			
Foot End Panel Weight	15 kg			
Head End Mattress Platform Weight	17.5 kg		20 kg	
Foot End Mattress Platform Weight	21.5 kg			
Total Bed Weight	71 kg		73.5 kg	

16.1 Construction

Bed Frame	Powder Coated Mild Steel
Fittings	Zinc / Nickel Plating
End Panels	Painted MDF
Side Rails	Steel

16.2 Environmental Conditions

	Min	Max
Noise (during operation)		48 dB(A)
Storage Temperature	+5° C	+ 50° C
Storage Relative Humidity	50%	70%
Operating Temperature	+10° C	+ 40° C
Operating Relative Humidity	20%	90% (without condensation)
Atmospheric Pressure	Min 800 hPa	Max 1060 hPa
Operating Altitude		Max 3000 m

16.3 Standards

This product complies with the following standards:

	Class 1 Medical Device
EN IEC 60601-1:2006	Medical Electrical Equipment: General requirements for basic safety and essential performance
EN IEC 60601-1-11:2015	Medical Electrical Equipment: General requirements for basic safety and essential performance: Requirements for medical electrical equipment and medical electrical systems used in the home healthcare environment
EN IEC 60601-1-2:2015	Medical Electrical Equipment: General requirements for basic safety and essential performance. Electromagnetic disturbances. Requirements and tests
EN IEC 60601-2-52:2010 + A1:2015	Medical electrical equipment. Particular requirements for basic safety and essential performance of medical beds

17 SYMBOLS USED

	Manufacturer	SN	Serial Number		Refer to Instructions
	Waste Electrical and Electronic Equipment (WEEE) – do not dispose of this product in general household or commercial waste		Insulation Class II, Type B		Type BF Applied Part. Applied parts are: Mattress Platform Frame, Backrest, Thigh Rest, Leg Rest, Head and Foot End Panel, Side Rails, Handset
			Alternating Current		
	Side Rails		Mattress Label		Mandatory to read instructions for use
	Caution		Caution, electrical hazard		Important Note
= 180KG	Max User Weight	= 220KG	Safe Working Load		Recommended Patient Size

18 PRODUCT DISPOSAL

This product should be thoroughly cleaned prior to disposal.

This product is manufactured from metal and plastic and can be disposed of through Local Authority Household Waste and Recycling Centres or through Local Trade Waste Collectors.

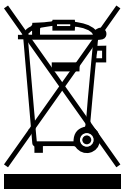

19 PRODUCT WARRANTY

The bed frame has a 5 year warranty period against any production faults.

The bed actuators & controls have a 3 year warranty period against any production faults.

Please keep the purchase receipt.

The bed warranty does NOT cover any of the following:

- Damages due to improper use
- Damaged or ruined parts due to wear and tear
- Damages caused by loss or spillage of liquids
- Damages from collisions or impacts against walls, furniture etc
- Damage caused by incorrect cleaning methods.

Warranty Terms:

- The warranty is not transferable
- Repairs must be carried out by an authorised dealer. Any repairs or alterations made by someone other than the dealer will void the warranty.
- The warranty of any replaced components will have the same expiry date of the original bed warranty.

The warranty will be void in the following cases:

- Damages caused by incorrect or inadequate maintenance as described in section 13 of these instructions.
- Modifications or repairs carried out by someone other than the dealer.
- Modifications or repairs with parts not supplied by NRS Healthcare Ltd.

If the device has problems, please contact your local authorised dealer and give all the information necessary to identify the defect and the type of repair required.

The manufacturer reserves the right to change weights, measures or other technical data contained in this manual without notice.

The information contained in this manual is approximate.

UK CA **NRS HEALTHCARE** Sherwood House, Cartwright Way, Forest Business Park, Bardon Hill, Coalville, Leicestershire, LE67 1UB, UK.

CE **NRS HEALTHCARE** 4C Altona Road, Blaris Industrial Estate, Lisburn, Co Antrim, Northern Ireland BT27 5QB

Tel: Customer Services: +44 (0)345 121 8111

Email: customerservice@nrshealthcare.co.uk

NRS Healthcare is a leading supplier of community equipment and daily living aids.
Please visit one of our websites to view our full range of products:
www.healthcarepro.co.uk or www.completecareshop.co.uk